Can slow deep breathing reduce pain?

American Pain Society
RESEARCH
EDUCATION
TREATMENT
ADVOCACY
PUBLISHED BY ELSEVIER

The Journal of Pain, Vol 00, No 00 (), 2020: pp 1–13
Available online at www.jpain.org and www.sciencedirect.com

Original Reports

Can Slow Deep Breathing Reduce Pain? An Experimental Study Exploring Mechanisms

Hassan Jafari,*,† Ali Gholamrezaei,*,‡ Mathijs Franssen,*,§ Lukas Van Oudenhove,‡ Qasim Aziz,‖ Omer Van den Bergh,* Johan W.S. Vlaeyen,*,¶ and Ilse Van Diest*

*KU Leuven - University of Leuven, Research Group Health Psychology, Leuven, Belgium, †Biostatistics and Health Informatics Department, Institute of Psychiatry, Psychology and Neuroscience, King's College London, London, UK, ‡KU Leuven - University of Leuven, Department Chronic Diseases, Metabolism & Ageing (CHROMETA), Translational Research Center for Gastrointestinal Disorders (TARGID), Leuven, Belgium, §Center for the Psychology of Learning and Experimental Psychopathology, University of Leuven, Leuven, Belgium, ‖Wingate Institute of Neurogastroenterology, Centre for Neuroscience and Trauma, Blizard Institute, Barts and The London School of Medicine and Dentistry, Queen Mary University of London, London, UK, ¶Experimental Health Psychology, Maastricht University, Maastricht, the Netherlands

Abstract: **Slow deep breathing (SDB) is commonly employed in the management of pain, but the underlying mechanisms remain equivocal. This study sought to investigate effects of instructed breathing patterns on experimental heat pain and to explore possible mechanisms of action. In a within-subject experimental design, healthy volunteers (n = 48) performed 4 breathing patterns: 1) unpaced breathing, 2) paced breathing (PB) at the participant's spontaneous breathing frequency, 3) SDB at 6 breaths per minute with a high inspiration/expiration ratio (SDB-H), and 4) SDB at 6 breaths per minute with a low inspiration/expiration ratio (SDB-L). During presentation of each breathing pattern, participants received painful heat stimuli of 3 different temperatures and rated each stimulus on pain intensity. Respiration, heart rate, and blood pressure were recorded. Compared to unpaced breathing, participants reported less intense pain during each of the 3 instructed breathing patterns. Among the instructed breathing patterns, pain did not differ between PB and SDB-H, and SDB-L attenuated pain more than the PB and SDB-H patterns. The latter effect was paralleled by greater blood pressure variability and baroreflex effectiveness index during SDB-L. Cardiovascular changes did not mediate the observed effects of breathing patterns on pain.**

Perspectives: ***SDB is more efficacious to attenuate pain when breathing is paced at a slow rhythm with an expiration that is long relative to inspiration, but the underlying mechanisms remain to be elucidated.***

Keywords: *Slow deep breathing, paced breathing, pain, baroreflex, blood pressure, cardiac vagal tone.*

Slow deep breathing (SDB) is a common complementary treatment strategy to manage pain.[2] Despite its wide use and some promising findings, evidence for its efficacy remains equivocal. Also the exact working mechanisms remain unestablished.[28] Distraction, emotion modulation, and expectations induced by voluntary SDB have been proposed among the most viable potential top-down mechanisms.[28] Another class of potential mechanisms relate to the profound impact of SDB on the cardiovascular system,

Received July 11, 2018; Revised December 6, 2019; Accepted December 19, 2019.
This study was supported by the Odysseus Grant "The Psychology of Pain and Disability Research Programme", projects G.0543.09N and G.0715.10N funded by the Research Foundation - Flanders, Belgium (FWO Vlaanderen), the DBOF funding of the Research Council KU Leuven (DBOF/14/020), and the "Asthenes" long-term structural funding –Methusalem grant by the Flemish Government, Belgium (Meth/15/011); FWO Vlaanderen and the Flemish Government had no role in developing the protocol.
The authors have no conflicts of interest to disclose related to the subject matter of this article.
Address reprint requests to Hassan Jafari, PhD, Research Group Health Psychology, Faculty of Psychology and Educational Sciences, KU Leuven, Tiensestraat 102, Box 3726, 3000 Leuven, Belgium.
E-mail: Hassan.Jafari@kuleuven.be
1526-5900/$36.00

https://doi.org/10.1016/j.jpain.2019.12.010

including an augmentation of cardiac vagal activity and the baroreflex.[3,27,38,64]

The peripheral branch of the baroreflex supports blood pressure homeostasis by a bidirectional negative feedback loop that adjusts heart rate and peripheral vascular resistance in response to blood pressure fluctuations. When systolic blood pressure (SBP) increases and baroreceptors are more strongly stimulated, cardiac vagal activity increases and sympathetic vascular tone decreases, causing a decrease in heart rate, cardiac output, and peripheral vascular resistance, lowering blood pressure again. Cardiac vagal activity can be noninvasively measured by heart rate variability (HRV) at respiratory rhythms, or, respiratory sinus arrhythmia (RSA).[5] RSA refers to oscillations in heart rate along the respiratory cycle. Due to vagal outflow facilitation to the heart during expiration and vagal inhibition during inspiration, heart rate decreases during expiration and increases during inspiration. The exact origins of RSA and their relative importance at various breathing frequencies are an ongoing matter of debate. Both central and peripheral mechanisms have been put forward.[5,20,33] Regarding the latter, the baroreflex is a major candidate mechanism of RSA. Deeper breathing during SDB causes greater fluctuations in intrathoracic pressure, cardiac filling, and blood pressure along the respiratory cycle, which results in greater RSA.[25,26,42,48,56] The magnitude of RSA and vagal activity is further increased when breathing at one's particular "resonance frequency," which on average lies around.1 Hz, and at which resonance properties of the baroreflex system may further enhance RSA and cardiac vagal activity.[61,62] Finally, cardiac vagal activity was found to be higher when breathing with lower compared to higher inspiration/expiration ratios (eg, 3s/7s vs 7s/3s,[60] or 2s/8s vs 8s/2s[9]), that is, when expiration is long relative to inspiration.[52]

Both baroreceptor stimulation and vagal activity relate to pain outcomes. Pharmacological vagal blockade attenuates the prophylactic effect of SDB in the development of experimentally induced central sensitization,[6] and some clinical and experimental studies have reported analgesic effects of vagus nerve stimulation.[8,11,23,58] Therefore, increased vagal activity has been suggested to underlie pain reduction during SDB. What remains unclear, however, is the extent to which pain reducing effects of SDB may closely relate also to baroreceptor stimulation and its potential central sequelae. Baroreceptor stimulation is known to affect emotional regulation and to inhibit pain processing via the central branch of the baroreflex.[14,19,21,32,47,67] Although not much is known about this central pathway, it is conceivable that stronger baroreceptor stimulation during instructed SDB may form a cheap-and-easy way to "behaviorally" stimulate the afferent vagus and reduce pain. However, parameters of baroreceptor stimulation and baroreflex functioning have not been well studied in experiments exploring the effects of SDB on pain.

In sum, further research is required to document the potential contribution of various mechanisms and to optimize SDB techniques such that they may reach their full potential in the management of pain. Therefore, the present study sought to investigate 1) the extent to which complying with an(y) instructed breathing task reduces pain; 2) whether instructed SDB at.1 Hz produces a greater pain reduction than instructed breathing at an individual's normal breathing frequency; 3) whether the inspiration/expiration ratio during SDB influences pain; and 4) how different SDB patterns influence cardiac vagal activity indices, SBP, and parameters of baroreflex function.

Methods

Sample Size Calculation

A previous study, using a within-subject design that investigated the hypoalgesic effect of SDB (6 breaths per minute) on tolerance of heat pain found a small effect size (Cohen's d = .37).[12] To observe a similar effect size with a power of .80 and alpha set at .05 in a 1-tailed test, a sample size calculation with G*Power 3.1[22] yielded an estimated required sample size of 46.

Participants

Participants (N = 52) were recruited through the Experiment Management System (SONA Systems) of the Faculty of Psychology and Educational Sciences at the University of Leuven, by advertisements on social media, and flyers on boards and a domestic window in the city of Leuven. Only healthy individuals (both genders) between 18 and 30 years old could participate. The exclusion criteria were: self-reported cardiovascular, respiratory, or neurological disorders, current acute pain, pacemaker or any other electronic medical implant, hearing or visual impairment, psychiatric disorders or recent psychological trauma, regular medication intake (except contraceptives), and pregnancy. In addition, participants were asked to avoid alcohol consumption for at least 24 hours, and coffee for at least 6 hours before taking part in the study. Each participant received €15 and a candy bar for her/his time and commitment. All participants read and signed the informed consent form. The experiment received approval by the Medical Ethics Committee of the University of Leuven (reference number: ML10824) and conducted according to the guidelines laid down in the Declaration of Helsinki.

Instruments and Measurements

Respiration

Respiratory movements were measured using a standard, well-accepted setup to measure respiration in psychophysiological research.[10,51,59] A rubber bellows attached to an aneroid pressure transducer and resistive bridge coupler (LabLinc V models V94-19, V94-05, and V72-25B, respectively, Coulbourn Instruments, Allentown, PA). The bellows was secured with the attached chain around the subject's upper abdomen adjacent to the lower thoracic ribs' region. Chest movements result in pressure changes inside the bellows, which are then

converted by the transducer. The output signal of the strain gauge coupler (DC coupling) was recorded at 100 samples per second.

Blood Pressure

Blood pressure was continuously and noninvasively measured at the middle phalanx of the middle finger of the left hand using the Portapres Model-2 device with 5 milliseconds temporal resolution (Finapres Medical System, Amsterdam, The Netherlands). The Portapres system offers a valid and reliable method to measure beat-to-beat arterial blood pressure.[24] The servo-reset mode (PhysioCal) was active during measurement, permitting automatic self-calibration. The raw blood pressure waveform signal output was recorded at a sampling rate of 400 samples per second.

Electrocardiography

The ECG was measured conform recommendations and guidelines in the field.[4,31] ECG electrodes (Kendall H66LG, round shape, 55 mm) were placed at the right and left mid-clavicle and lower left rib cage (lead II configuration). The signal was recorded at 1,000 Hz after analog amplification and filtering (gain: 1k, band-pass: 1−150 Hz, LabLinc V model V75-04, Coulbourn Instruments, Allentown, PA). The respiration, ECG, and blood pressure waveform data were stored simultaneously by the computer after digital conversion at the specified sampling rates using a National Instruments data acquisition system (16-bit PCI-6221 card with NI BNC-2111 connector block, National Instruments, Austin, TX) and AFFECT version 4.0 software.[50]

Pain Ratings

Using the AFFECT software, a computerized 100-point numerical rating scale,[39] ranging from 0 (no pain) to 100 (worst possible pain) was displayed on the screen promptly following each pain stimulus. Subjects were asked to indicate the intensity of pain using the mouse.

Thermal Stimulation

A thermal stimulator (PATHWAY model ATS, Medoc Ltd, Rimat Yishai, Israel) generated heat pain. The device has built-in safety limits (min. 0°C, max. 51°C). The thermal stimulator probe (3 cm × 3 cm) was attached to the wrist area of the left hand. The baseline temperature was set at 32°C. During the actual experiment, noxious stimulations lasted 5 seconds. Three different temperatures were applied, corresponding to temperatures of 1°C, 2°C, and 3°C above the participant's pain threshold as determined in a calibration procedure (see procedure section). The rationale to use different temperatures was that the experience of obvious variations in painfulness would continue motivate participants to carefully evaluate and rate slight variations in painfulness of each stimulus. In addition, using 3 temperatures allows exploring whether or not a potential pain-reducing effect of SDB is constant across different levels of nociceptive input. The lowest and highest temperatures used to induce painful sensations were based on the individual's individual pain threshold level (see procedure), but could not be lower than 32°C or higher than 50°C. The interstimulus interval was between 35 and 45 seconds at random. Throughout the study, a hand-held safety control allowed participants to halt stimulation at any time.

Study Procedure

Preparation and Baseline Measurement

The experiment took place in the Health Psychology Lab of the University of Leuven (KU Leuven, Belgium). All participants were tested between 9 AM and 8 PM. The general procedure of the experiment was explained to the participants without hints about the specific aims and hypotheses of the study. During the whole study, participants were seated on a chair with back and arm supports in a quiet temperature-controlled room and the researcher could observe the participant from an adjacent control room using a continuous live video feed. After a rest period of 5 minutes, a 7-minute baseline measurement of the breathing pattern was acquired. The experimenter selected 10 respiratory prototypical cycles from this recording to manually determine the participant's spontaneous breathing frequency and inspiration: expiration ratio. This allowed implementation of individualized respiratory parameters later on in one of the instructed respiratory conditions (ie, PB; the paced breathing). Occasional sighs, very shallow breaths, and obvious artifacts (visual inspection) were not considered for the selection of prototypical respiratory cycles.

Pain threshold measurement

A thermal probe with a baseline temperature of 32°C was attached to the palmar side of the left wrist. Seven identical trials were delivered, each consisting of a series of heat stimuli in which temperature was increased at a rate of 1°C/s, up to a maximum of 50°C. Participants were instructed to focus and report (by pressing a mouse button) at which point the sensation of warmth changed into pain. After having reached the pain threshold, the temperature was rapidly decreased at a rate of 8°C/s to the baseline temperature of 32°C. The intertrial intervals lasted 30 seconds. The average of the last 5 trials (maximal temperature when participants clicked) was taken as the pain threshold.

Breathing patterns

Four different respiratory patterns were used, giving rise to 4 experimental conditions: 1) Unpaced breathing (UB), spontaneous breathing without any instructions, 2) PB, during which breathing was individually set at the natural frequency, with the inspiration/expiration ratio of each participant derived from the baseline measurement, 3) SDB at 6 breaths per minute with a high

inspiration/expiration ratio (inspiration 6,000 milliseconds; postinspiration pause 500 milliseconds; expiration 2,000 milliseconds; postexpiration pause 1,500 milliseconds; SDB-H), and 4) SDB at 6 breaths per minute with a low inspiration/expiration ratio (inspiration 2,000 milliseconds; postinspiration pause 500 milliseconds; expiration 6,000 milliseconds; postexpiration pause 1,500 milliseconds; SDB-L). In the 3 PB conditions, a bar graph displayed at the screen in front of the participants moved vertically at the desired rhythm in order to cue the targeted breathing pattern. Following the baseline measurement, participants practiced the 3 PB patterns (condition 2, 3, and 4) each for 1 minute under supervision of the experimenter. This training phase contained no noxious stimuli.

Experimental Procedure

Participants performed each of the 4 breathing patterns for 8 minutes in counterbalanced order. During each breathing condition, 12 thermal stimuli were applied. Each intensity (1°C, 2°C, and 3°C above the pain threshold) was applied 4 times per condition in a random order. The stimulus duration was 5 seconds, and the interstimulus interval varied randomly between 35 and 45 seconds. After each thermal stimulus, the pain scale appeared on the computer screen (for a maximum of 10 seconds) and participants rated the intensity of the pain induced by the stimulus. There was a 2-minute break between the breathing conditions. The experimenter was not present in the participant room during the experiment. At the end of the experiment, participants were debriefed shortly regarding the aim of the study.

Data Reduction and Analysis

Respiration

Using MATLAB software (R2016b, Mathworks, Inc, Natick, MA), the recorded respiration signal was passed through a low pass digital filter with a cutoff frequency of 1 Hz. Breathing rate (per minute) was extracted for each breathing condition using the peak detection algorithm. All detected respiratory cycles were visually inspected and corrected.

Heart Rate Variability

The ECG signal was processed with Kubios software version 2.2[53]. The R-wave peak times as well as normal to normal interbeat intervals (IBIs) were extracted after visual inspection and correction of the detected heartbeats. In case of a missing IBI due to extreme noise or ectopic heartbeats, the Kubios' artifact correction function, which is based on cubic spline interpolation, was applied to replace the missing IBI. HRV analysis was performed with Kubios software to provide insights into the modulation of cardiac vagal activity.[36] Since the frequency-domain indices of HRV are very influenced by breathing frequency, we chose 2 indices in the time-domain; the average of the IBIs and the root mean square of successive differences in IBI (RMSSD).[36] The latter parameter has been shown to be a good measure of vagally mediated HRV.[54] Recordings of a breathing condition containing more than 5% artifacts were not used to calculate RMSSD[44]; this was only the case for 2 out of 192 recordings (48 subjects $\times$ 4 conditions).

Systolic Blood Pressure

The finger blood pressure signal was filtered digitally (low pass at 30 Hz), after which beat-to-beat SBP was extracted using a peak detection algorithm in MATLAB. The extracted heartbeat times from the ECG signal (R-peak times) were implemented in the SBP detection algorithm to ensure that each heart beat would have a corresponding SBP. Detected SBP values were aligned with the blood pressure waveform signal for visual inspection and correction. In case of artifacts or self-calibration resulting in missing (incorrect) SBP values, the missed values were replaced by linear interpolation. The final SBP values were paralleled with the corresponding heartbeat times and IBIs for baroreflex function analysis.

Baroreflex Sensitivity

Baroreflex sensitivity (BRS) is defined as the reflex changes in IBIs in response to changes in blood pressure and can be calculated using various methods. The sequence method is used in the present research.[43] A custom-made MATLAB algorithm for Baroreflex function analysis scanned the beat to beat SBP and IBI time series to find sequences during which changes in SBP were paralleled with changes in IBI. The following criteria were considered when identifying such sequences: a minimum change in successive SBPs of at least 1 mm Hg; a minimum change in successive IBIs of at least 5 milliseconds; a sequence length of at least 3 heartbeats; and a correlation between changes in SBPs and IBIs of.8 or higher. The lag (delay) between SBP and IBI time series was considered 0; SBP_n was paired with IBI_{n+1} (Δ R-peak$_{n+1}$ time - R-peak$_n$ time). The slope of the regression line between SBPs and IBIs in a sequence was taken as the baroreflex gain for that sequence (unit ms/mm Hg).[43]

As only a subset of the SBP ramps is normally paralleled by changes in the IBIs, the *baroreflex effectiveness index (BEI)* was calculated as the relative number of "effective sequences" (ramps of SBPs accompanied by lengthening of IBIs) divided by the total number of the SBP ramps.[15] This additional index allows better exploration of the modulation of baroreflex function in psychophysiological studies.[45,46,65] For both of the baroreflex indices, only the up-sequences (rise in SBPs accompanied by lengthening of the IBIs) were considered in this study since such sequences represent stimulation (loading) of the baroreceptors over the breathing cycle.

Also, the *amplitude* of the *SBP up-ramps* (unit mm Hg), whether or not associated with changes in the IBIs, was extracted. This measure is important since SDB creates profound phasic perturbations in blood pressure leading to augmented stimulation of the baroreceptors.[27,64]

Missing SBP values that were replaced by interpolation were not included in the baroreflex function analysis to prevent overestimation of the sequences. The BRS, BEI, and amplitude of SBP up-ramps were averaged over the sequences in each breathing condition. The baroreflex analysis was not done for a breathing condition with more than 10% missing SBP values, which was the case in 21 out of 192 recordings (48 subjects $\times$ 4 conditions).

Statistical Analyses

Outliers were defined as observations lying outside the first or third quartiles by 1.5 $\times$ inter quartile range, considered per breathing condition. No such outliers were present in the pain ratings. A repeated measures ANOVA with subsequent contrast analyses was run to check whether the *breathing pattern* (4: UB, PB, SDB-H, and SDB-L) produced different breathing frequencies.

Linear mixed models were used to address our research questions. For pain ratings, the predictor variables *breathing pattern* and *temperature* of the heat stimulus (+1°C, +2°C, and +3°C above pain threshold) were entered in 4 incremental models, which all included the participants' ID as a random factor (random intercept model). Model-0 was the null model with no additional predictor variable. In Model-1, *temperature* was entered as the first categorical predictor variable. An improved fit of Model-1 over Model-0 would indicate a significant main effect of stimulus temperature on pain. Model-2 additionally included the categorical predictor variable *breathing pattern.* An improved fit above Model-1 indicates a significant main effect of *breathing pattern* on pain ratings. Model-3 additionally included the interaction between *temperature* and *breathing pattern* as a third predictor. If it would show an improved fit over Model-2, the interaction term is significant. Model fit was assessed with chi-squares tests, comparing the incremental models' Akaike information criterion, Bayesian information criterion, and log-likelihood values from the simplest to the most complex model. The model with the best fit indices were selected as the model of choice for this study. Each research question was investigated directly by assigning the relevant condition of breathing as reference point (so-called centering) and estimating the mean difference (distance) of other conditions to it. First, we tested the effect of performing an instructed breathing pattern on pain (instruction-effect). Therefore, data were centered on the UB condition and we tested whether pain ratings in the paced and 2 SDB conditions differed from the unpaced condition. The second research question was whether SDB produced pain reduction compared to a more rapid paced pattern approximating the spontaneous breathing frequency. To test this, data were centered on the paced condition and we tested whether the 2 SDB conditions differed from the paced condition. Finally, to test whether variations in inspiration/expiration ratio during SDB would produce different effects on pain ratings, the model was centered on the SDB-H condition and compared this condition with the SDB-L condition.

To investigate the effect of *breathing pattern* on the *cardiovascular parameters* (IBI, SBP, RMSSD, BRS, BEI, and SBP ramp), a linear mixed model was used with *breathing pattern* as a categorical predictor variable. The lme function of NLME package (Pinheiro, Bates, DebRoy, Sarkar & R Core Team - 2017) in R was used.

Whenever a significant effect of breathing pattern was found on a cardiovascular outcome variable, we further explored whether that cardiovascular measure (IBI, RMSSD, BRS, BEI, and SysBP ramp) mediated the observed effects of Breathing pattern on pain ratings. Multilevel mediation analyses were performed using the Mediation Package for R version 4.4.7 (2019).[55] This package uses simulation (quasi-Bayesian Monte Carlo method based on normal approximation) to estimate average causal mediation effects (indirect effect), average direct effects, and total effects.

Results

Four out of the 52 participants in this study were excluded due to technical problems. The final data set consisted of 48 healthy volunteers, 35 (73%) female, with a mean age of 22.5 $\pm$ 3 years. Due to technical problems, ECG data were lost for 1 participant (resulting in N = 47), SBP data for 3 participants (N = 45), and respiratory data for 1 participant (N = 47).

Manipulation Check of the Breathing Patterns

Breathing frequency differed significantly between the breathing conditions, F (136,3) = 154.4, $P < .0001$. The mean (and SD) of breathing frequency for the UB, PB, SDB-H, and SDB-L conditions were 13.4 (3.9), 14.7 (3.9), 6.1 (.16), and 6.1 (.14) breaths per minute respectively. Follow-up comparisons confirmed that breathing frequencies 1) were lower in the 2 SDB conditions compared to UB and PB conditions (t(136) were all >13.6, P values were all <.0001), 2) did not significantly differ between the UB and PB conditions, t(136) = 2.46, P =.071, and 3) did not differ between SDB-L and SDB-H conditions, t(136) =.002, P >.999, as expected.

Pain Ratings

The random effect of individuals captured 65% of the total variance in the null model (SD = 19.6), indicating considerable interindividual differences in pain ratings. Table 1, representing the stepwise comparisons of the 4 models, shows that each model generated a significant improvement in fit above the simpler, preceding model. Model-3, also including the interaction term, showed the overall best fit and was therefore selected. As can be expected, pain ratings increased with increasing temperature of the heat stimulus (main effect of *temperature*), see Table 2 for the estimates per temperature. Fig 2 and Table 3 show the estimates for the predictor variable *breathing pattern* for each level of *temperature*.

Part A (left part) of Table 3 addresses the first research question of this study and shows that compared to UB,

Table 1. Incremental Models of the Pain Intensity Ratings

Models	df	AIC	BIC	Log-Likelihood	Test	L. Ratio (χ^2)	P Value
Model-0	3	19034	19051	−9513.9			
Model-1	5	18129	18157	−9059.3	1 VS 0	909.24	<.0001
Model-2	8	18029	18074	−9006.2	2 VS 1	106.11	<.0001
Model-3	14	18026	18106	−8999.0	3 VS 2	14.50	.0245

Abbreviations: AIC, Akaike information criterion; BIC, Bayesian information criterion; df, degree of freedom; L. Ratio, likelihood ratio; Model-0, the model with subject as random effect, pain rating as response and no predictor, t'o capture the presence of within-subject correlations in pain ratings; Model-1, adding temperature to Model-0 as the first predictor improved the model ($P < .0001$), meaning that pain ratings are different for the 3 different thermal stimulations; Model-2, breathing pattern added to Model-1 as the second predictor significantly further improved the model ($P < .0001$), meaning that pain ratings differed for the 4 conditions of breathing; Model-3, adding the interaction term of the 2 predictors of Model-2 further improved the model ($P < .024$), indicating that the effect of breathing conditions is not the same for the 3 different temperatures.

Table 2. Mixed Model Estimates of the Main Effect of *Temperature* on *Pain Rating*

Temperature	Model 1		P Value
	Coefficient	SE	
±1°C	28.6	2.96	
+2°C	+6.6	1.16	<.0001
+3°C	+22.6	1.16	<.0001

Abbreviations: SE, standard error; +1°C, one degree Celsius; +2°C, two degree Celsius; and +3°C, three degree Celsius above pain threshold of the participant. The condition on which data were centered is underlined (reference condition). Coefficients represent the mean pain rating for the underlined condition, and differences from that mean for the conditions which are not underlined.

pain ratings were lower during each of the 3 instructed breathing patterns (PB, SDB-H, and SDB-L). Numbers are the differences from the mean of the reference condition (UP). These effects were significant for each of the 3 temperatures (see also Fig 2). The second research question is addressed in part B (mid part) of Table 3, as it compares pain ratings during PB with each of the 2 SDB conditions. Findings indicate that SDB-L, but not SDB-H, was associated with lower pain ratings compared to PB; this effect was significant for temperatures +2°C and +3°C, but not for +1°C (see also Fig 1). Finally, part C (right part) of Table 3 represents the third research question, as it compares SDB-L with SDB-H. Results show that SDB-L was associated with lower pain ratings than SDB-H, but this effect was only significant for the highest temperature (+3°C), see also Fig 2. Overall, Fig 2 suggests that effects of Breathing pattern tend to grow stronger with increasing temperatures. Table 4 shows the estimates for the Breathing pattern × Temperature interaction term and confirms that compared to 1°C, the pain-reducing effect of SDB is significantly greater at +3°C.

Cardiovascular Outcomes

Mean IBI, Systolic Blood Pressure, and RMSSD

The 4 breathing patterns did not differ in terms of mean SBP, $F(3,104) = 1.57$, $P = .21$ (Fig 3A), whereas a

Table 3. Mixed Model Estimates of the Effects of *Breathing Pattern* and *Temperature* on Pain

	A. First Research Question			B. Second Research Question				C. Third Research Question			
	Coefficient	SE	P		Coefficient	SE	P		Coefficient	SE	P
+1°C											
UB	28.6	2.96									
PB	-3.2	1.16	**.005**	PB	25.3	2.96					
SDB-H	-3.3	1.16	**.004**	SDB-H	-.07	1.16	.95	SDB-H	25.3	2.96	
SDB-L	-5.0	1.16	**<.0001**	SDB-L	-.1.7	1.16	.13	SDB-L	-1.7	1.16	.90
+2°C											
UB	35.2	2.96									
PB	-3.01	1.16	**.01**	PB	32.2	2.96					
SDB-H	-3.2	1.16	**.006**	SDB-H	-.2	1.16	.8	SDB-H	32.0	2.96	-
SDB-L	-5.3	1.16	**<.0001**	SDB-L	-2.3	1.16	**.049**	SDB-L	-2.1	1.16	.07
+3°C											
UB	51.3	2.96									
PB	-5.9	1.16	**<.0001**	PB	45.4	2.96					
SDB-H	-7.1	1.16	**<.0001**	SDB-H	-1.2	1.16	.29	SDB-H	44.1	2.96	
SDB-L	-10.4	1.16	**<.0001**	SDB-L	-4.5	1.16	**.0001**	SDB-L	-3.3	1.16	**.005**

Abbreviations: SE, standard error; UB, unpaced breathing; PB, paced breathing; SDB-L, slow deep breathing with low inspiration/expiration ratio; SDB-H, slow deep breathing with high inspiration/expiration ratio; +1°C, one degree Celsius; +2°C, two degree Celsius; and +3°C, three degree Celsius above pain threshold of participant. Conditions on which data were centered are underlined. Coefficients represent the mean pain rating for the underlined condition (reference condition), and differences from that mean for the conditions that are not underlined. Significant *P* values are indicated in bold.

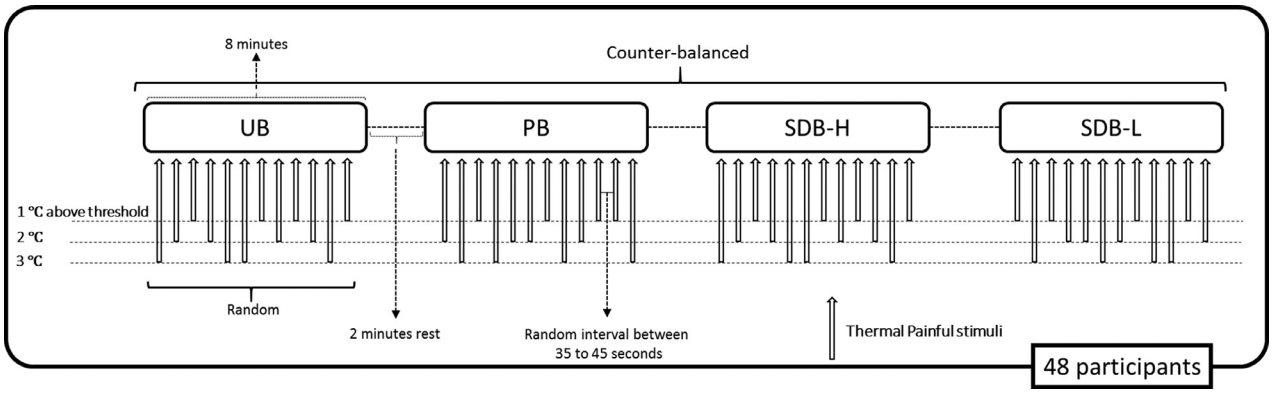

Figure 1. Schematic representation of the experimental protocol. Longer vertical lines represent thermal painful stimuli of a higher temperature.

significant effect of Breathing pattern on mean IBI was present, F(3,137) = 8.88, $P < .0001$, (Fig 3B). Compared to UB (828 milliseconds), the other 3 instructed breathing patterns were all associated with lower mean IBI (−33, −25, and −33 milliseconds for PB, SDB-H, and SDB-L, respectively, see also Table 5). Breathing patterns were associated with differences in RMSSD, $F(3,122) = 20.76$, $P < .0001$. Both SDB conditions were associated with a significantly higher RMSSD compared to UB and PB conditions. Differences between UB and PB as well as between SDB-L and SDB-H conditions were not significant, (see Table 5 and Fig 3C).

Baroreflex Function

The breathing patterns were also associated with different levels of BRS, $F(3,132) = 13.61$, $P < .0001$ (Table 5 and Fig 3D). BRS estimates for the 2 SDB conditions were significantly higher than both UB and PB conditions. In addition, BRS was significantly lower during PB compared to UB. Also, BEI was significantly affected by Breathing pattern, $F(3,105) = 7.83$, $P = .0001$. This effect was driven by a significantly higher BEI during SDB-L compared to each of the other breathing patterns, see Table 5 and Fig 3E. Finally, also the SBP up-ramp amplitude differed along the 4 breathing patterns,

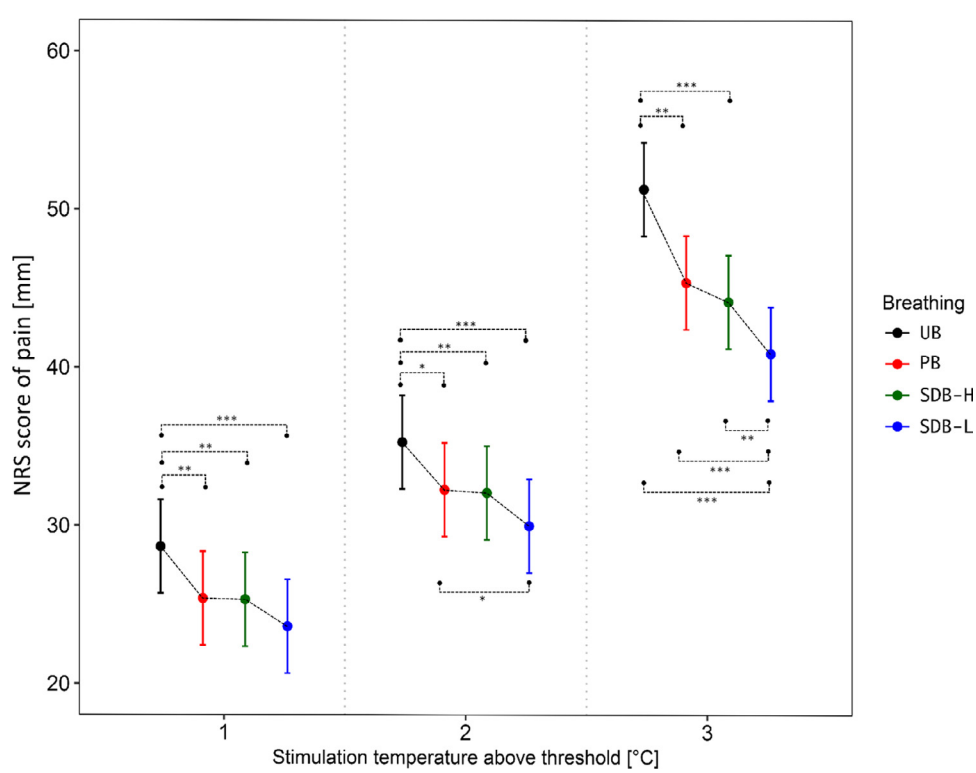

Figure 2. Estimated pain ratings for the different breathing patterns for 3 thermal pain stimuli (linear mixed effect model). * $P = .01$ to .05, ** $P = .001$ to .01, *** $P \leq .001$. Error bars represent 95% confidence interval of the mean. Abbreviations: NRS, numeric rating scale; mm, millimeter; UB, unpaced breathing; PB, paced breathing; SDB-L, slow deep breathing with low inspiration/expiration ratio; SDB-H, slow deep breathing with high inspiration/expiration ratio.

Table 4. Mixed Model Estimates of the *Breathing Pattern* × *Temperature* Interaction on Pain

Interaction Effect	Model 1		*P Value*
	Coefficient	*SE*	
±1 °C and UB	28.6	2.96	
+2 °C × PB	.26	1.65	.8
SDB-H	.13	1.65	.9
SDB-L	−.26	1.65	.8
+3 °C × PB	−2.6	1.65	.11
SDB-H	−3.8	1.65	**.02**
SDB-L	−5.3	1.65	**.001**

Abbreviations: SE, standard error; UB, unpaced breathing; PB, paced breathing; SDB-L, slow deep breathing with low inspiration/expiration ratio; SDB-H, slow deep breathing with high inspiration/expiration ratio; +1°C, one degree Celsius; +2°C, two degree Celsius; and +3°C, three degree Celsius above pain threshold of participant.
The condition on which data were centered is underlined. Coefficients represent the mean of pain rating for the underlined (reference) condition, and differences from that mean for the conditions that are not underlined. Significant *P* values are indicated in bold.

$F(3,103) = 67.53$, $P < .0001$, see Table 5 and Fig 3F. The SDB-L was associated with a higher SBP up-ramp amplitude than all other breathing patterns, whereas SDB-H had a higher amplitude than UB and PB conditions. Finally, the PB had a higher SBP up-ramp amplitude than the UB condition. The differences for BEI and for the amplitude of the SBP up-ramps suggest that SDB-L, as compared to SDB-H, is associated with a stronger blood pressure variability and phasic baroreceptor stimulation within the respiratory cycle, which is illustrated in Fig 4.

Mediation Analyses

Findings of all mediation analyses performed can be found in the Supplementary materials. In short, none of the cardiovascular variables mediated any of the observed effects of Breathing pattern on pain.

Discussion

In the present study, 48 healthy subjects rated pain intensity after heat stimulation of 3 different intensities in 4 different breathing conditions: unpaced spontaneous breathing; PB at the individual's spontaneous breathing frequency; paced SDB with a low inspiration/expiration ratio; and paced SDB with a high inspiration/expiration ratio. Employing this within-subject study design, we investigated the potential hypoalgesic effects of SDB on pain reports and to explore underlying mechanisms. A first research question was whether the mere task of complying with an instructed breathing pattern could reduce pain ratings. In addition, we aimed to investigate the potential effects of SDB beyond such effect. Specifically, the second and third research questions sought to address whether an instructed SDB pattern reduces pain more than an instructed, PB pattern at an individual's spontaneous breathing frequency, and whether the ratio between inspiratory and expiratory times influences the potential hypoalgesic effect of SDB. Finally, the study also aimed to document how SDB affects cardiovascular parameters, including parameters related to baroreflex function.

Our findings indicate that participants rated pain lower whenever they performed a PB task. Relative to UB, pain reduction occurred not only during SDB, but also when participants performed PB at their spontaneous breathing frequency (PB). The pain-modulatory effects of performing an instructed breathing task observed in the present study are consistent with findings from other studies suggesting that the experience of pain is modulated by attentional re-allocation caused by other, nonrespiratory types of tasks and stimuli.[16,29,34,63] Other explanations, which are not necessarily incompatible with attention as an underlying mechanism, may involve an increased sense of control/emotional modulation, or expectations about the breathing tasks' effect on pain. Although the present study was not set up to disentangle the contributions of these various top-down modulatory influences on pain, the instruction-effect observed in the present study confirms that instructed breathing, irrespective of the applied breathing pattern or frequency, has the potential to reduce pain ratings. Clinically, this is useful to know, as any PB task with which patients feel comfortable may produce this effect. Concentrating on and changing one's breathing pattern may be performed easily in a variety of contexts and may thus constitute an accessible, effective, rapid, cheap, and easy tool to attenuate pain.

Techniques commonly used to manage pain (eg, meditation, yoga, biofeedback, etc) typically incorporate both components of respiratory and attentional modulation.[35] It is as yet unclear whether SDB can produce pain attenuation beyond the instruction-effect (second and third research questions). Our findings suggest that such "specific" SDB effect depends on the i/e ratio that is adopted during SDB. Participants rated the most intense heat pain stimulus as less painful only when performing slow paced with a low inspiration/expiration ratio (SDB-L). Thus, slow breathing *in itself* seems not sufficient to produce pain reduction by mechanisms beyond those producing the instruction-effect. Until more critical tests have been performed, we can only speculate why SDB with a low, but not with a high, inspiration/expiration ratio produces such effect.

A first potential pathway is that variations in breathing frequency and inspiration/expiration ratio produce different cardiovascular effects that may underlie the observed differences in pain inhibition. Specifically, cardiac vagal activity and/or baroreceptor stimulation have been proposed as potential cardiovascular mediators of respiratory hypoalgesia during SDB,[1,12,28,37] but previous studies on SDB and pain typically lack parameters of baroreflex function or stimulation. Therefore, the

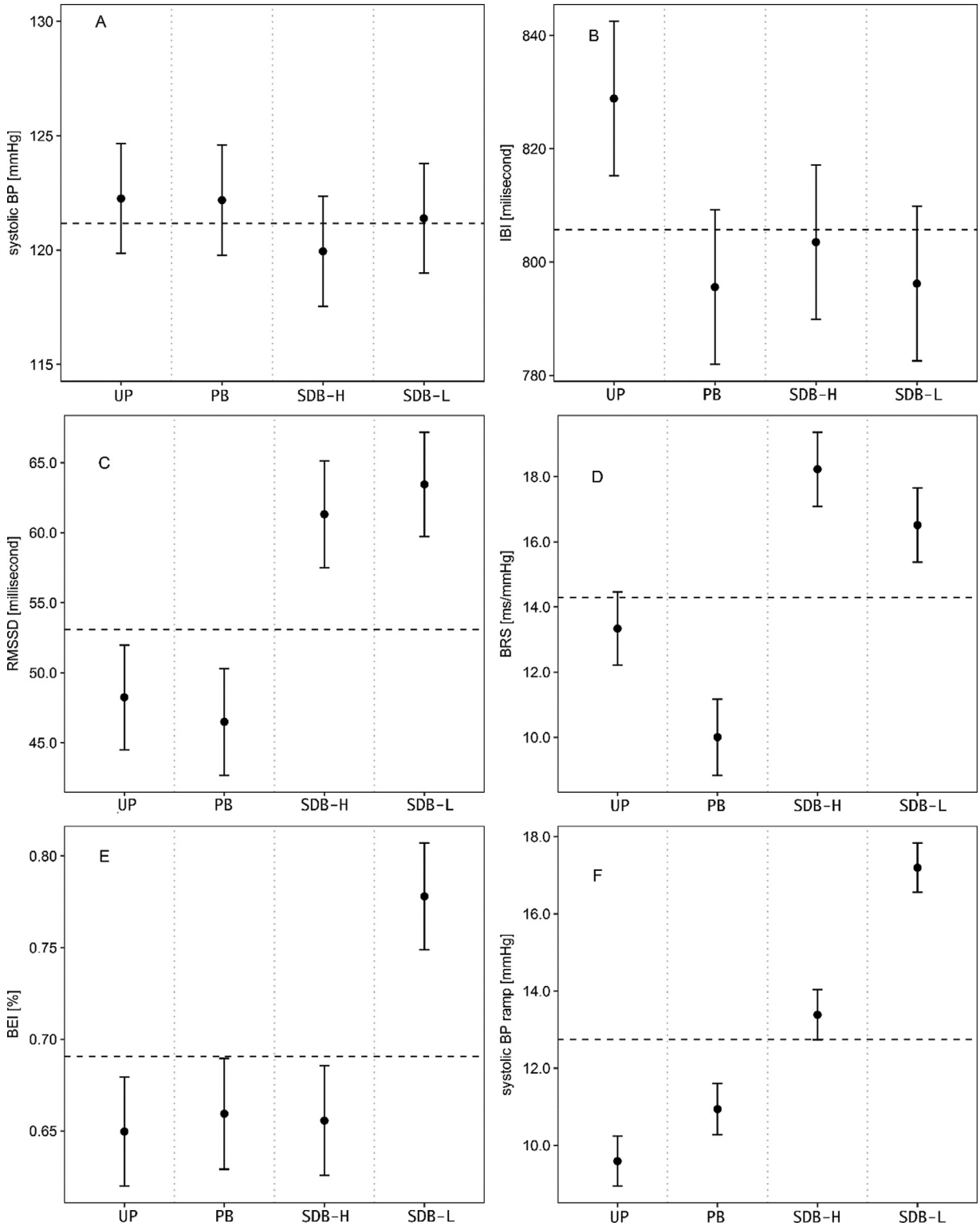

Figure 3. Means (and confidence intervals) of systolic blood pressure (BP), interbeat intervals (IBI), root mean successive squared differences of IBI's (RMSSD), baroreflex sensitivity (BRS), baroreflex effectiveness index (BEI), and the ramp of sequences of increasing systolic BP (systolic BP ramp) during unpaced breathing (UB), paced breathing at the participant's natural breathing frequency (PB), slow deep breathing at 6 breaths per minute with a high inspiration:expiration ratio (SDB-H), and slow deep breathing at 6 breaths per minute with a low inspiration:expiration ratio (SDB-L).

present study explored a broader set of cardiovascular parameters during the 4 breathing conditions, including parameters related to baroreflex function. An important finding in this respect is that SDB-L and SDB-H did not differ significantly in cardiac vagal activity (RMSSD), whereas differences between SDB-L and SDB-H were found for the BEI as well as the amplitude of the SBP up-ramps. Both these effects suggest that SDB-L, as compared to SDB-H, is associated with a stronger blood pressure variability and phasic baroreceptor stimulation

Table 5. Main Effects of *Breathing Pattern* and Contrasts Between Estimates for the Cardiovascular Outcome Variables

Response Variable	Mean IBI (ms)		Mean SBP (mm Hg)		RMSSD (ms)		BRS (ms/mm Hg)		BEI		SBP up-ramp (mm Hg)	
Contrast	β	P	β	P	β	P	β	P	β	P	β	P
UB -	828.8		122.2		48.2		13.3		.64		9.6	
- PB	-33.3	<.0001	-.07	.95	-1.75	.53	-3.30	.003	.01	.77	1.34	.03
- SDB-H	-25.3	<.0001	-2.30	.06	13.10	<.0001	4.80	<.0001	.006	.85	3.79	<.0001
- SDB-L	-32.6	<.0001	-.86	.46	15.20	<.0001	3.17	.004	.13	.0001	7.60	<.0001
PB -	795.5		122.2		46.5		10.0		.66		10.9	
- SDB-H	7.90	.28	-2.20	.07	14.80	<.0001	8.20	<.0001	-.004	.91	2.44	.0001
- SDB-L	.61	.93	-.80	.50	16.90	<.0001	6.50	<.0001	.12	.0004	6.26	<.0001
SDB-H -	803.5		119.9		61.3		18.2		.65		13.4	
- SDB-L	-7.30	.32	1.40	.23	2.10	.43	-1.70	.12	.12	.0002	3.81	<.0001
Main effect		<.0001		.21		<.0001		<.0001		.0001		<.0001

Abbreviations: *P*, *P* value; IBI, interbeat interval; SBP, systolic blood pressure; RMSSD, root mean square of the successive differences; BRS, baroreflex sensitivity; BEI, baroreflex effectiveness index; UB, unpaced breathing; PB, paced breathing; SDB-L, slow deep breathing with low inspiration/expiration ratio; SDB-H, slow deep breathing with high inspiration/expiration ratio; ms, milliseconds.
The condition on which data were centered is underlined. β, beta coefficient, which is the mean of the measure when underlined and the difference form the mean when not underlined.

within the respiratory cycle, as illustrated in Fig 4. Given the role of baroreceptor stimulation on pain inhibition,[19,32,47,67] it is tempting to think that the stronger phasic increases in SBP and higher blood pressure variability during SDB-L compared to SDB-H may underlie the observed differences in pain. However, exploratory mediation analyses with BEI or the amplitude of SBP up-ramps as mediators could not support such explanation.

In addition to the above mentioned differences between both SDB patterns, several other effects of breathing pattern on cardiovascular outcomes were observed in the present study, but none of them mediated the observed effects of breathing patterns on pain. IBI's were reduced (or: heart rate was increased) in the 3 PB conditions compared to the UB condition. This effect may relate to the increased attentional load associated with the instructed breathing tasks. Furthermore, RMSSD was higher in the 2 SDB conditions compared to other breathing conditions, indicative of a higher phasic cardiac efferent vagal activity due to lowering respiration rate down to .1 Hz.[13,48,49] Baroreflex sensitivity, which is also known to be largely influenced by breathing frequency,[27,64] showed a very similar pattern to RMSSD. As explained earlier, these effects did not parallel or mediate those observed for the pain ratings. The findings of the present study are therefore consistent with those from HRV biofeedback research, in which salutary effects are consistently observed for both clinical and cardiovascular outcomes but appear unrelated to each other.[66]

A second set of mechanisms underlying differences in pain attenuation among the different instructed breathing patterns may relate to the modulatory influences that were also hypothesized to underlie the instruction-effect. As the present study did not assess whether the 3 instructed breathing patterns may differ with respect to their expected efficacy to reduce pain ratings, and/or with different levels of distraction or expectancy, we can only speculate about such influences. It should be noted that in order to minimize expectancy effects, participants were not made explicitly aware of the study aims/hypothesis. More distraction is a rather unlikely reason for the greater pain reduction during the SDB-L compared to both other instructed breathing patterns. Firstly, compared to SDB, PB at one's individual's breathing frequency has more respiratory phase transitions (from inspiration to expiration and vice versa) to comply with, which may actually increase the attentional load imposed by the breathing task and, thus, cause more attention away from pain. Second, voluntary reduction of breathing frequency typically induces a lower inspiration/expiration ratio.[64] As such, SDB with a high inspiration/expiration ratio is a rather unnatural breathing pattern, may therefore be relatively hard to perform and require more effort compared to slow breathing with a low ratio or PB at one's natural breathing frequency.[60] Thus, an explanation in terms of distraction seems unlikely. An alternative reason why a low inspiration/expiration ratio during SDB produces greater pain reduction compared to a high inspiration/expiration ratio is that the former breathing pattern seems more effective for stress reduction and relaxation than the latter.[9,60] This may be crucial, as findings from other studies suggest that relaxation may be an essential feature (or context) for SDB to modulate pain.[7] In a similar vein, antinociceptive effects of baroreceptor stimulation are reduced under conditions of mental stress.[17,18,40] Therefore, it is highly recommended that future studies also control for potentially

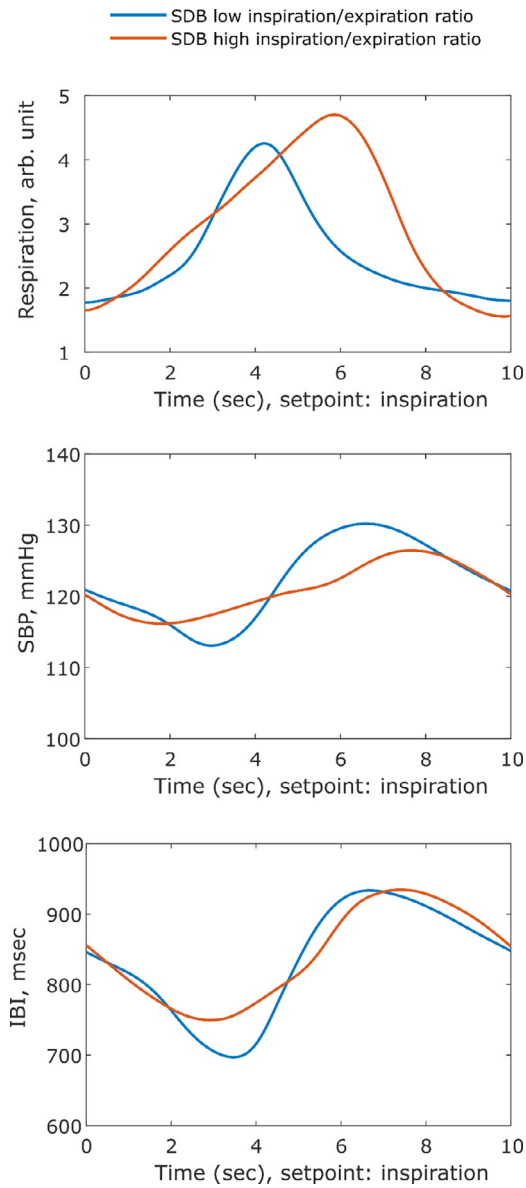

Figure 4. Changes in systolic blood pressure along the respiratory cycle during SDB (systolic blood pressure) with a low versus a high inspiration/expiration ratio. Data represent all SBP values averaged across respiratory cycles of all participants for both SDB patterns. Abbreviation: IBI, interbeat interval.

different levels of stress imposed by various instructed breathing patterns.

The present study has a number of limitations. Top-down modulatory influences on pain report cannot be disentangled as we did not explore or control for potential effects of expectation or different levels of attentional re-allocation and stress reduction caused by the breathing patterns. Also, potential underlying cardiovascular mechanisms were explored with noninvasive, indirect indexes (eg, BRS and HRV) of autonomic regulation. As a result, we can only indirectly infer that baroreceptors were phasically stimulated more strongly and that vagal activity increased during SDB. Another limitation is that we did not assess participants' resonance frequency, while studies have found that breathing at one's exact RF results in maximal RSA increases.[61] We also did not measure the height of our participants, which may have been informative about how close the instructed .1 Hz was to a participant's RF.[62] Finally, gender effects could not be investigated in this study due to the limited number of participants and an unbalanced gender distribution. Taking gender into account seems increasingly relevant, as several recent findings suggest that the association between vagal activity and pain may be limited to men.[30,41,57]

In summary, the present study found that PB can reduce pain reports and that this hypoalgesic effect is enhanced when breathing is paced at a lower frequency (6 breaths per minute) with a low inspiration/expiration ratio (ie, prolonged expiration). Despite profound cardiovascular effects of SDB, cardiovascular changes did not mediate the effects of breathing patterns on pain in the present study. Mechanisms underlying pain reduction during instructed breathing may therefore more likely include top-down influences including attentional re-allocation, expectations, stress reduction, and/or emotional modulation, which warrant greater attention in future research. Further studies are also required to evaluate the influence of SDB on pain using various pain modalities, in a larger sample with sufficient power to investigate the effect of gender and extend the findings to patient populations.

Supplementary Data

Supplementary data related to this article can be found at https://doi.org/10.1016/j.jpain.2019.12.010.

References

1. Arsenault M, Ladouceur A, Lehmann A, Rainville P, Piché M: Pain modulation induced by respiration: Phase and frequency effects. Neuroscience 252:1-11, 2013

2. Barnes PM, Bloom B, Nahin RL: Complementary and alternative medicine use among adults and children: United States, 2007. Natl Health Stat Report 12:1-24, 2008

3. Bernardi L, Porta C, Gabutti A, Spicuzza L, Sleight P: Modulatory effects of respiration. Auton Neurosci 90:47-56, 2001

4. Berntson GG, Bigger JT, Eckberg DL, Grossman P, Kaufmann PG, Malik M, Nagaraja HN, Porges SW, Saul JP, Stone PH, van der Molen MW: Heart rate variability: Origins, methods, and interpretive caveats. Psychophysiology 34:623-648, 1997

5. Berntson GG, Cacioppo JT, Quigley KS: Respiratory sinus arrhythmia: Autonomic origins, physiological mechanisms, and psychophysiological implications. Psychophysiology 30:183-196, 1993

6. Botha C, Farmer AD, Nilsson M, Brock C, Gavrila AD, Drewes AM, Knowles CH, Aziz Q: Preliminary report:

Modulation of parasympathetic nervous system tone influences oesophageal pain hypersensitivity. Gut 64:611-617, 2015

7. Busch V, Magerl W, Kern U, Haas J, Hajak G, Eichhammer P: The effect of deep and slow breathing on pain perception, autonomic activity, and mood processing—an experimental study. Pain Med 13:215-228, 2012

8. Busch V, Zeman F, Heckel A, Menne F, Ellrich J, Eichhammer P: The effect of transcutaneous vagus nerve stimulation on pain perception—An experimental study. Brain Stimul 6:202-209, 2013

9. Cappo BM, Holmes DS: The utility of prolonged respiratory exhalation for reducing physiological and psychological arousal in non-threatening and threatening situations. J Psychosom Res 28:265-273, 1984

10. Castegnetti G, Tzovara A, Staib M, Gerster S, Bach DR: Assessing fear learning via conditioned respiratory amplitude responses. Psychophysiology 54:215-223, 2017

11. Chakravarthy K, Chaudhry H, Williams K, Christo PJ: Review of the uses of vagal nerve stimulation in chronic pain management. Curr Pain Headache Rep 19:54, 2015

12. Chalaye P, Goffaux P, Lafrenaye S, Marchand S: Respiratory effects on experimental heat pain and cardiac activity. Pain Med 10:1334-1340, 2009

13. Cooke WH, Cox JF, Diedrich AM, Taylor JA, Beightol LA, Ames JE, Hoag JB, Seidel H, Eckberg DL: Controlled breathing protocols probe human autonomic cardiovascular rhythms. Am J Physiol 274:H709-H718, 1998

14. Critchley HD, Garfinkel SN: Interactions between visceral afferent signaling and stimulus processing. Front Neurosci 9:286, 2015

15. Di Rienzo M, Parati G, Castiglioni P, Tordi R, Mancia G, Pedotti A: Baroreflex effectiveness index: An additional measure of baroreflex control of heart rate in daily life. Am J Physiol Regul Integr Comp Physiol 280, 2001. R744—R751

16. Dunckley P, Aziz Q, Wise RG, Brooks J, Tracey I, Chang L: Attentional modulation of visceral and somatic pain. Neurogastroenterol Motil 19:569-577, 2007

17. Duschek S, Dietel A, Schandry R, Reyes Del Paso GA: Increased baroreflex sensitivity and reduced cardiovascular reactivity in individuals with chronic low blood pressure. Hypertens Res 31:1873-1878, 2008

18. Duschek S, Muckenthaler M, Werner N, Reyes del Paso GA: Relationships between features of autonomic cardiovascular control and cognitive performance. Biol Psychol 81:110-117, 2009

19. Dworkin BR, Elbert T, Rau H, Birbaumer N, Pauli P, Droste C, Brunia CH: Central effects of baroreceptor activation in humans: Attenuation of skeletal reflexes and pain perception. PNAS 91:6329-6333, 1994

20. Eckberg DL: Point: Counterpoint: Respiratory sinus arrhythmia is due to a central mechanism vs. respiratory sinus arrhythmia is due to the baroreflex mechanism. J Appl Physiol 106:1740-1742, 2009. discussion 1744

21. Edwards L, Inui K, Ring C, Wang X, Kakigi R: Pain-related evoked potentials are modulated across the cardiac cycle. Pain 137:488-494, 2008

22. Faul F, Erdfelder E, Buchner A, Lang A-GG, Faul F, Buchner A, Lang A-GG: Statistical power analyses using G*Power 3.1: Tests for correlation and regression analyses. Behav Res Methods 41:1149-1460, 2009

23. Frøkjaer JB, Bergmann S, Brock C, Madzak A, Farmer AD, Ellrich J, Drewes AM: Modulation of vagal tone enhances gastroduodenal motility and reduces somatic pain sensitivity. Neurogastroenterol Motil 28:592-598, 2016

24. Gerin W, Goyal TM, Mostofsky E, Shimbo D: The Measurement of Blood Pressure in Cardiovascular Research. Handbook of Physiological Research Methods in Health Psychology. Thousand Oaks, CA: SAGE Publications; page 115—132.

25. Gholamrezaei A, Van Diest I, Aziz Q, Vlaeyen JWS, Van Oudenhove L: Influence of inspiratory threshold load on cardiovascular responses to controlled breathing at 0.1 Hz. Psychophysiology 56:e13447, 2019

26. Hirsch J, Bishop B: Respiratory sinus arrhythmia in humans: how breathing pattern modulates heart rate. Am J Physiol, 1981

27. Horsman HM, Peebles KC, Tzeng YC: Interactions between breathing rate and low-frequency fluctuations in blood pressure and cardiac intervals. J Appl Physiol 119:793-798, 2015

28. Jafari H, Courtois I, Van Den Bergh O, Vlaeyen JWS, Van Diest I: Pain and respiration: A systematic review. Pain 158:995-1006, 2017

29. James JE, Hardardottir D: Influence of attention focus and trait anxiety on tolerance of acute pain. Br J Health Psychol 7:149-162, 2002

30. Janner H, Klausenitz C, Gürtler N, Hahnenkamp K, Usichenko TI: Effects of electrical transcutaneous vagus nerve stimulation on the perceived intensity of repetitive painful heat stimuli: A blinded placebo- and sham-controlled randomized crossover investigation. Anesth Analg 126:2085-2092, 2018

31. Jennings JR, Berg WK, Hutcheson JS, Obrist P, Porges S, Turpin G: Committee report. Publication guidelines for heart rate studies in man. Psychophysiology 18:226-231, 1981

32. Kardos A, Rau H, Greenlee MW, Droste C, Brody S, Roskamm H: Reduced pain during baroreceptor stimulation in patients with symptomatic and silent myocardial ischaemia. Cardiovasc Res 28:515-518, 1994

33. Karemaker JM: Counterpoint: Respiratory sinus arrhythmia is due to the baroreflex mechanism. J Appl Physiol 106:1742-1743, 2009. discussion 1744

34. Levine JD, Gordon NC, Smith R, Fields HL: Post-operative pain: Effect of extent of injury and attention. Brain Res 234:500-504, 1982

35. Lutz A, Slagter HA, Dunne JD, Davidson RJ: Attention regulation and monitoring in meditation. Trends Cogn Sci 12:163-169, 2008

36. Malik M, Bigger T, Camm J, Robert K, Malliani A, Moss A, Schwartz P: Heart rate variability. Standards of measurement, physiological interpretation, and clinical use. Task Force of the European Society of Cardiology and the North American Society of Pacing and Electrophysiology. Eur Heart J 17:354-381, 1996

37. Martin SL, Kerr KL, Bartley EJ, Kuhn BL, Palit S, Terry EL, Delventura JL, Rhudy JL: Respiration-induced hypoalgesia: exploration of potential mechanisms. J Pain 13:755-763, 2012

38. Mason H, Vandoni M, Debarbieri G, Codrons E, Ugargol V, Bernardi L: Cardiovascular and respiratory effect of yogic slow breathing in the yoga beginner: What is the best approach? Evid Based Complement Altern Med 2013:743504, 2013

39. McMahon S, Koltzenburg M, Tracey I, Turk D: Wall & Melzack's Textbook of Pain: Expert Consult, 6th ed Philadelphia, Saunders, 2013

40. Mini A, Rau H, Montoya P, Palomba D, Birbaumer N: Baroreceptor cortical effects, emotions and pain. Int J Psychophysiol 19:67-77, 1995

41. Nahman-Averbuch H, Dayan L, Sprecher E, Hochberg U, Brill S, Yarnitsky D, Jacob G: Sex differences in the relationships between parasympathetic activity and pain modulation. Physiol Behav 154:40-48, 2016

42. Novak V, Novak P, de Champlain J, Le Blanc AR, Martin R, Nadeau R: Influence of respiration on heart rate and blood pressure fluctuations. J Appl Physiol 74:617-626, 1993

43. Parati G, Di Rienzo M, Mancia G: How to measure baroreflex sensitivity: from the cardiovascular laboratory to daily life. J Hypertens 18:7-19, 2000

44. Peltola MA: Role of editing of R-R intervals in the analysis of heart rate variability. Front Physiol 3:148, 2012

45. Reyes del Paso GA, González I, Hernández JA: Baroreceptor sensitivity and effectiveness varies differentially as a function of cognitive-attentional demands. Biol Psychol 67:385-395, 2004

46. Reyes del Paso GA, Hernández JA, González MI: Differential evaluation of the baroreceptor cardiac reflex effectiveness as a function of sequence length. Int J Psychophysiol 59:91-96, 2006

47. Reyes del Paso GA, Montoro C, Muñóz Ladrón de Guevara C, Duschek S, Jennings JR: The effect of baroreceptor stimulation on pain perception depends on the elicitation of the reflex cardiovascular response: Evidence of the interplay between the two branches of the baroreceptor system. Biol Psychol 101:82-90, 2014

48. Sin PYW, Galletly DC, Tzeng YC: Influence of breathing frequency on the pattern of respiratory sinus arrhythmia and blood pressure: Old questions revisited. Am J Physiol Heart Circ Physiol 298:H1588-H1599, 2010

49. Song H-S, Lehrer PM: The effects of specific respiratory rates on heart rate and heart rate variability. Appl Psychophysiol Biofeedback 28:13-23, 2003

50. Spruyt A, Clarysse J, Vansteenwegen D, Baeyens F, Hermans D: Affect 4.0: A free software package for implementing psychological and psychophysiological experiments. Exp Psychol 57:36-45, 2010

51. Stephens CL, Christie IC, Friedman BH: Autonomic specificity of basic emotions: Evidence from pattern classification and cluster analysis. Biol Psychol 84:463-473, 2010

52. Strauss-Blasche G, Moser M, Voica M, McLeod DR, Klammer N, Marktl W: Relative timing of inspiration and expiration affects respiratory sinus arrhythmia. Clin Exp Pharmacol Physiol 27:601-606, 2000

53. Tarvainen MP, Niskanen J-P, Lipponen JA, Ranta-Aho PO, Karjalainen PA: Kubios HRV—heart rate variability analysis software. Comput Methods Programs Biomed 113:210-220, 2014

54. Thayer JF, Ahs F, Fredrikson M, Sollers JJ, Wager TD: A meta-analysis of heart rate variability and neuroimaging studies: Implications for heart rate variability as a marker of stress and health. Neurosci Biobehav Rev 36:747-756, 2012

55. Tingley D, Yamamoto T, Hirose K, Keele L, Imai K: Mediation: R package for causal mediation analysis. J Stat Softw 59:1-38, 2014

56. Toska K, Eriksen M: Respiration-synchronous fluctuations in stroke volume, heart rate and arterial pressure in humans. J Physiol 472:501-512, 1993

57. Tracy LM, Koenig J, Georgiou-Karistianis N, Gibson SJ, Giummarra MJ: Heart rate variability is associated with thermal heat pain threshold in males, but not females. Int J Psychophysiol 131:37-43, 2018

58. Usichenko T, Laqua R, Leutzow B, Lotze M: Preliminary findings of cerebral responses on transcutaneous vagal nerve stimulation on experimental heat pain. Brain Imaging Behav 11:30-37, 2017

59. Van Diest I, Bradley MM, Guerra P, Van den Bergh O, Lang PJ: Fear-conditioned respiration and its association to cardiac reactivity. Biol Psychol 80:212-217, 2009

60. Van Diest I, Verstappen K, Aubert AE, Widjaja D, Vansteenwegen D, Vlemincx E: Inhalation/exhalation ratio modulates the effect of slow breathing on heart rate variability and relaxation. Appl Psychophysiol Biofeedback 39:171-180, 2014

61. Vaschillo E, Lehrer P, Rishe N, Konstantinov M: Heart rate variability biofeedback as a method for assessing baroreflex function: A preliminary study of resonance in the cardiovascular system. Appl Psychophysiol Biofeedback 27:1-27, 2002

62. Vaschillo EG, Vaschillo B, Lehrer PM: Characteristics of resonance in heart rate variability stimulated by biofeedback. Appl Psychophysiol Biofeedback 31:129-142, 2006

63. Verhoeven K, Van Damme S, Eccleston C, Van Ryckeghem DML, Legrain V, Crombez G: Distraction from pain and executive functioning: An experimental investigation of the role of inhibition, task switching and working memory. Eur J Pain 15:866-873, 2011

64. Wang Y-P, Kuo TBJ, Lai C-T, Chu J-W, Yang CCH: Effects of respiratory time ratio on heart rate variability and spontaneous baroreflex sensitivity. J Appl Physiol 115:1648-1655, 2013

65. Wang Y-P, Kuo TBJ, Lai C-T, Lee G-S, Yang CCH: Effects of breathing frequency on baroreflex effectiveness index and spontaneous baroreflex sensitivity derived by sequence analysis. J Hypertens 30:2151-2158, 2012

66. Wheat AL, Larkin KT: Biofeedback of heart rate variability and related physiology: A critical review. Appl Psychophysiol Biofeedback 35:229-242, 2010

67. Wilkinson M, McIntyre D, Edwards L: Electrocutaneous pain thresholds are higher during systole than diastole. Biol Psychol 94:71-73, 2013