Maastricht University

Alpha-Linolenic acid metabolism in humans : compartmental modeling dietary modulation and effects on serum lipids

Citation for published version (APA):

Goyens, P. L. L. (2007). *Alpha-Linolenic acid metabolism in humans : compartmental modeling dietary modulation and effects on serum lipids*. [Doctoral Thesis, Maastricht University]. Datawyse / Universitaire Pers Maastricht. https://doi.org/10.26481/dis.20070125pg

Document status and date:
Published: 01/01/2007

DOI:
10.26481/dis.20070125pg

Document Version:
Publisher's PDF, also known as Version of record

Please check the document version of this publication:

• A submitted manuscript is the version of the article upon submission and before peer-review. There can be important differences between the submitted version and the official published version of record. People interested in the research are advised to contact the author for the final version of the publication, or visit the DOI to the publisher's website.
• The final author version and the galley proof are versions of the publication after peer review.
• The final published version features the final layout of the paper including the volume, issue and page numbers.

Link to publication

General rights
Copyright and moral rights for the publications made accessible in the public portal are retained by the authors and/or other copyright owners and it is a condition of accessing publications that users recognise and abide by the legal requirements associated with these rights.

• Users may download and print one copy of any publication from the public portal for the purpose of private study or research.
• You may not further distribute the material or use it for any profit-making activity or commercial gain
• You may freely distribute the URL identifying the publication in the public portal.

If the publication is distributed under the terms of Article 25fa of the Dutch Copyright Act, indicated by the “Taverne” license above, please follow below link for the End User Agreement:

www.umlib.nl/taverne-license

Take down policy
If you believe that this document breaches copyright please contact us at:

repository@maastrichtuniversity.nl

providing details and we will investigate your claim.

Download date: 19 Apr. 2024

α-Linolenic Acid Metabolism in Humans

Compartmental modeling
dietary modulation
and effects on serum lipids

The studies presented in this thesis were performed within the Nutrition and Toxicology Research Institute Maastricht (NUTRIM), which participates in the Graduate School VLAG (Food Technology, Agrobiotechnology, Nutrition and Health Sciences), accredited by the Royal Netherlands Academy of Arts and Sciences.

Cover design: Herman E. Popeijus
Layout: Danina Kekus
Printed by: Datawyse, Universitaire Pers Maastricht

© Petra L. L. Goyens, 2007
ISBN 10: 90 5278 592 0
ISBN 13: 978 90 5278 592 9

α-Linolenic Acid Metabolism in Humans

Compartmental modeling dietary modulation and effects on serum lipids

Proefschrift

ter verkrijging van de graad van doctor
aan de Universiteit Maastricht,
op gezag van de Rector Magnificus,
Prof. mr. G. P. M. F. Mols
volgens het besluit van het College van Decanen,
in het openbaar te verdedigen
op donderdag 25 januari 2007 om 16:00 uur

door

Petra Lydia Louisa Goyens

geboren te Genk op 17 januari 1972

UM
UNIVERSITAIRE PERS MAASTRICHT

Promotor
Prof. dr. ir. R. P. Mensink

Beoordelingscommissie
Prof. dr. K. R. Westerterp (voorzitter)
Dr E. E. Blaak
Prof. dr. R.-J. M. Brummer
Prof. dr. E. G. Schouten (Wageningen University, Wageningen)
Prof. dr. E. A. Trautwein (Unilever Food and Health Research Institute, Vlaardingen)

WAGENINGEN
CENTRE
FOR FOOD
SCIENCES

The research described in this thesis was partly supported by the Wageningen Centre for Food Sciences (WCFS).

CONTENTS

CHAPTER 1 7
General Introduction

CHAPTER 2 19
Compartmental modeling to quantify α-linolenic acid conversion after longer term intake of multiple tracer boluses

CHAPTER 3 47
Conversion of α-linolenic acid in humans is influenced by the absolute amounts of α-linolenic acid and linoleic acid in the diet and not by their ratio

CHAPTER 4 69
Determinants of dietary α-linolenic acid conversion and oxidation in healthy humans

CHAPTER 5 85
The dietary α-linolenic acid to linoleic acid ratio does not affect the serum lipoprotein profile in humans

CHAPTER 6 105
Effects of α-linolenic acid versus those of EPA/DHA on cardiovascular risk markers in healthy elderly subjects

CHAPTER 7 123
General Discussion

Summary 137
Samenvatting 143
Dankwoord 147
Curriculum Vitae 149
Publications 153

CHAPTER 1

General Introduction

FATTY ACID STRUCTURE AND NOMENCLATURE

Fatty acids are hydrocarbon chains with at a methyl group ($-CH_3$) at one end and a carboxyl group (-COOH) at the other end. Based on the number of double bonds, they can be categorized as saturated or unsaturated fatty acids. A fatty acid is saturated if it does not contain any double bonds, so that all the carbon atoms are saturated with the maximum number of hydrogen atoms possible. In contrast, fatty acids that do contain double bonds are called unsaturated because there are two hydrogen atoms missing for each double bond that is present in the fatty acid chain. More specifically, if fatty acids contain only one double bond they are called monounsaturated, whereas fatty acids that contain two or more double bonds are referred to as polyunsaturated.

There are two fatty acid nomenclature systems that are both based on the number of carbon atoms and the number of double bonds in a fatty acid chain, but differ with respect to how the locations of the double bonds are denoted. In the delta notation (Δ), the double bonds are counted from the carboxyl end. In the omega (ω) or "n minus" notation, the double bonds are counted from the methyl end. Based on the latter nomenclature, the unsaturated fatty acids can be subdivided into 4 distinct fatty acid families: the n-9, n-7, n-6 and n-3 fatty acids. Most polyunsaturated fatty acids are members of the n-6 or n-3 family, which have linoleic and α-linolenic acid as the respective parent compounds. Typically, n-6 fatty acids contain their first double bond between the 6th and the 7th carbon atom counting from the carbon atom of the methyl terminus, whereas in n-3 fatty acids the double bond is located between 3rd and the 4th carbon atom. In humans, there is no interconversion between the different fatty acids families. A fatty acid will always remain within its family since the introduction of new double bonds and carbon atoms will take place between the last double bond and the carboxyl end.

ESSENTIAL FATTY ACIDS

Our diet does not need to provide all fatty acids for optimal functioning because the human body can synthesize saturated and polyunsaturated fatty acids de novo. However, there are two polyunsaturated fatty acids, linoleic acid (LA; C18:2n-6) and α-linolenic acid (ALA; C18:3n-3) that humans - unlike plants - cannot form themselves because they lack the necessary delta-12 and delta-15 desaturase enzymes.

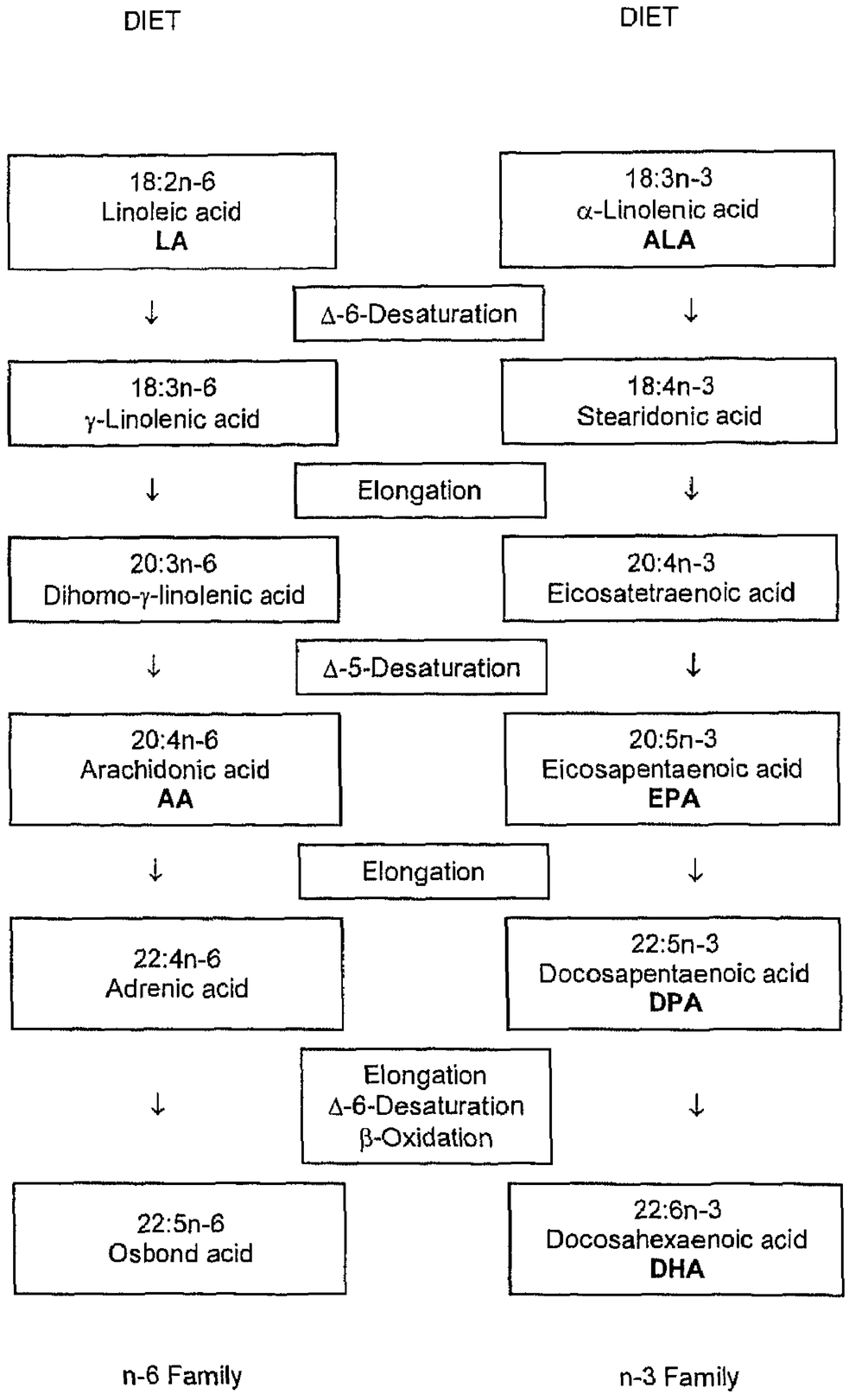

Figure 1
Schematic presentation of the conversion pathways of linoleic acid and α-linolenic acid in humans

Despite the human body's inability to make these two fatty acids de novo, their structural and physiological roles make them indispensable for human health [1]. That is why LA and ALA are called essential fatty acids (EFAs). The only way for humans to acquire them is through dietary sources. Therefore, LA and ALA have to be supplied in

adequate amounts through the diet. ALA is predominantly found in nuts and nut oils, in vegetable oils such as rapeseed, soybean and lineseed oil, and also to a lesser extent in the chloroplasts of green leafy vegetables. Dietary sources rich in LA are sunflower, soybean, nut and corn oils.

Once ALA and LA are ingested, humans can convert them into longer and more unsaturated fatty acids through alternating enzymatic desaturation and elongation reactions. An elongase enzyme extends the fatty acid chain by 2 carbon atoms, while a desaturase introduces a new double bound between the last double bond and the -COOH terminus of the fatty acid chain. **Figure 1** depicts the pathway through which the precursor compounds LA and ALA are converted into the long-chain polyunsaturated fatty acids (LCPUFAs). The complete conversion cascade involves 3 desaturation and 3 elongation steps which take place in the endoplasmatic reticulum, while the final chain shortening β-oxidation step in the synthesis of DHA occurs in the peroxisomes [2, 3]. Dihomo-γ-linolenic acid (DHGL; C20:3n-6) and arachidonic acid (AA; C20:4n-6), which can serve as precursors for eicosanoid synthesis, are the most important LCPUFAs derived from LA. The principle long-chain derivates of ALA are eicosapentaenoic acid (EPA; C20:5n-3), docosapentaenoic acid (DPA; C22:5n-3) and docosahexaenoic acid (DHA; C22:6n-3). The structures of LA, ALA, EPA and DHA are presented in **Figure 2**.

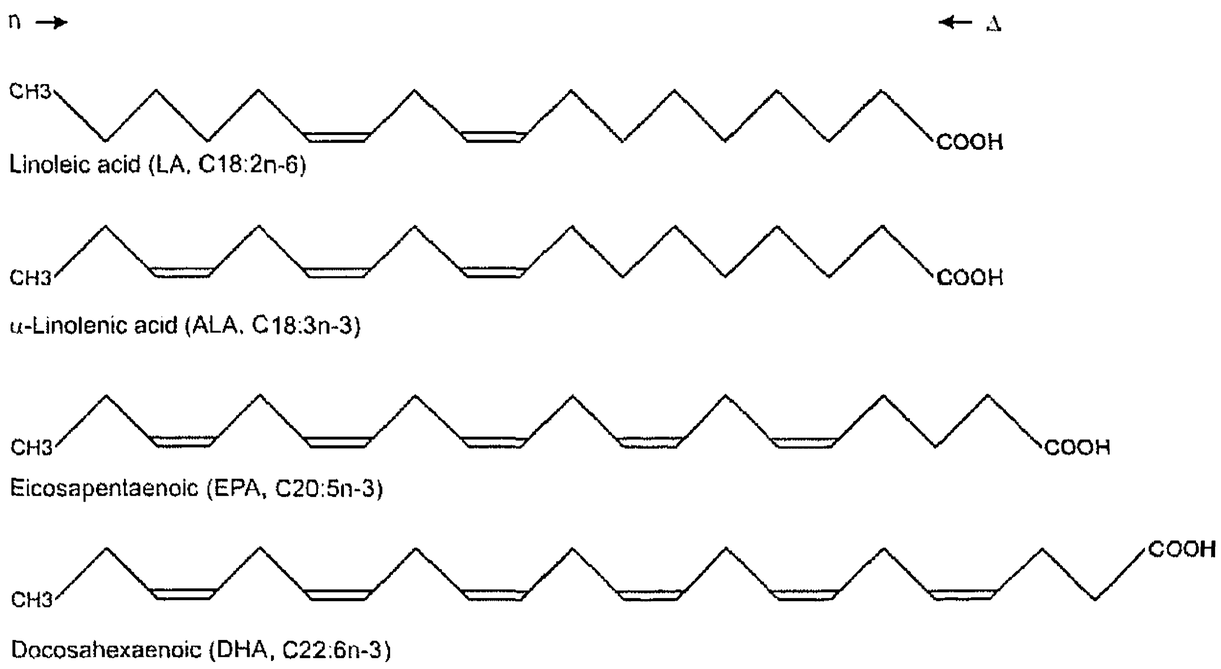

Figure 2

Structure of linoleic acid, α-linolenic acid, eicosapentaenoic acid and docosahexaenoic acid

Chapter 1

METABOLISM OF ALA AND ITS QUANTIFICATION

EPA and DHA are known as marine or fish fatty acids since they are primarily present in fish oil. EPA and DHA have become subject of interest due to their postulated favorable health effects, particularly with regard to the risk reduction for cardiovascular disease (CVD) [4]. Their precise mechanisms of action at the cardio-vascular level are largely unknown, but positive effects on endothelial function, blood pressure, triacylglycerol concentrations, hemostatic function, inflammation, and arrhythmias have been mentioned [5-13].

Considering their beneficial and protective health effects, international nutritional guidelines have incorporated recommendations for the marine derived fatty acids and advocate a regular intake of fatty fish. Most diets, however, still supply amounts of EPA and DHA below those recommended. An increase in ALA consumption might be an alternative to compensate for a low EPA and DHA intake, as it is a precursor for EPA and DHA synthesis, while it is widespread and readily available from vegetable sources. However, dietary ALA has three metabolic fates: storage, conversion into LCPUFAs and β-oxidation [14-17]. So far the extent of ALA conversion and its determinants are poorly understood. Hence, it is relevant to obtain quantitative insight into the pathways of ALA metabolism to establish whether this plant derived fatty acid is indeed a suitable substitute for the marine fatty acids.

A straightforward method to estimate ALA conversion in humans does not exist at the present. It is studied using two main approaches: through dietary ALA intervention studies and through stable isotope studies [16, 18]. Dietary intervention studies address the influence of a changed ALA intake on the accumulation of ALA and its derivates in tissues, membranes and plasma lipid fractions. The few human intervention studies with an increased ALA intake demonstrated increased proportions of ALA and EPA in lipid fractions, but detected either no or only minor changes in DHA proportions [19-23]. The downside of feeding studies, however, is that the dietary induced shifts in the distinct n-3 fatty acid levels provide merely a qualitative or semi-quantitative reflection of the underlying conversion pathways. In contrast, stable isotope studies with deuterated or ^{13}C-labeled ALA isotopes do enable quantification of the n-3 fatty acid conversion cascade *in vivo*. So far, the number of ALA tracer conversion studies in humans is sparse [19, 24-31], and the majority of these studies have used the area under the curve (AUC) technique to estimate ALA conversion [19, 24, 25, 30, 31]. Results from stable isotope studies using the AUC approach indicate that the extent to which ALA is converted into EPA is less than 10 % [24, 25, 30, 31], whereas conversion into DHA is extremely marginal [24, 25]. However, AUC values are summary measures, which are useful to assess overall biosyntheses of n-3 fatty acids but, unlike compartmental modeling, can not accurately discriminate between the metabolic parameters that determine ALA conversion. The first study to apply compartmental

modeling as a means to estimate conversion of ALA in adults, estimated that solely 0.2 % of ALA was converted into EPA [28]. Of this small fraction, 63 % was subsequently converted into DPA and 37 % into DHA. In this study, however, a single large tracer dose of 1 gram deuterated alpha-linolenate ethyl ester (d5-C18:3n-3) was given, which exceeded by far the habitual daily ALA intake. Except for the fact that such high amounts of tracer may disrupt the system that is studied, synthesis of DPA and DHA proceeds slowly, as was previously shown in the study by Vermunt et al. [27]. Hence, compartmental modeling following a longer-term oral tracer dosing is a more convenient approach to quantify dietary ALA conversion.

The interplay between ALA and LA further complicates the estimation of n-3 conversion. Competitive inhibition exists between ALA and LA because they share the same enzymatic conversion system [32]. For example, the delta-6 desaturation step, which is the initial reaction for the synthesis of EPA from ALA and AA from LA, is assumed to be the rate-limiting step in the conversion pathway [18]. Despite that this enzyme favors ALA as substrate over LA, LA has a competitive advantage, as it is far more abundant in most diets than ALA [32]. A high LA intake may therefore limit conversion of ALA considerably. In a stable isotope study, Emken et al. [31] estimated using AUC of total plasma lipid enrichments, that conversion in young men was 18.5 % after a saturated fatty acid rich diet (4.7 energy percent (En%) LA, 0.6 En% ALA, ALA to LA ratio of 1:8), whereas it was 11 % on a polyunsaturated fatty acid enriched diet (9.3 En% LA, 0.3 En% ALA, ALA to LA ratio of 1:30). Despite that the authors attributed this 40 % decrease in ALA conversion solely to the influence of an increased amount of LA in the diet, these results might also be due to the decreased intake of ALA or the decreased ALA to LA ratio. Nevertheless, conversion of ALA into the n-3 LCPUFAs can be enhanced by increasing its availability for the converting enzymes. Theoretically, this can be achieved in three distinct ways: through an increase of ALA intake, via a decrease in the consumption of LA or rather by increasing the ALA to LA ratio in the diet. The outcome of each approach separately has not been quantitatively assessed in humans before.

Aside from the already poor understanding of the effect of the dietary ALA and LA content on ALA metabolism, even less is known about the extent to which specific subject characteristics act as determinants. Findings from a few recent studies point towards a higher conversion capacity of n-3 fatty acids in women of reproductive age than in men [24, 25, 33-35]. In a study with 103 women and 72 men who consumed diets with well controlled and comparable n-3 levels, Giltay et al. showed that the proportion of DHA in plasma cholesterylesters was 15 % higher in women than in men [33]. Moreover, a 10 % higher DHA concentration was observed in women taking oral contraceptives than in women not taking them [33]. To date, only three stable isotope studies have quantitatively explored whether diet-induced changes in ALA conversion are gender-dependent [24, 25, 35]. Burdge et al. performed one study in young women

and one in men of the same age group, using comparable experimental conditions [24, 25]. Although no formal statistical analyses were reported, results from both studies were suggestive. In women, conversion of ALA into EPA and DHA, as quantified from total plasma lipids using the area under the ^{13}C-labeled n-3 fatty acid concentration time curves, was 21 % and 9 % respectively [25]. In contrast, men only synthesized 9 % of EPA and 0 % of DHA de novo [24]. In response to Burdge et al's findings, Pawlosky et al. published a select number of kinetic parameters that were derived from post-hoc analyses of data from a study that was not primarily designed to investigate gender effects [35]. Results suggested that, depending on the composition of the background diet, gender indeed affected synthesis of DHA. In women, significantly higher rate coefficients for the conversion of DPA to DHA were observed when a beef-based diet was consumed, whereas they only tended to increase following an ad libitum diet and were not changed after a fish-based diet. However, it should be noted that the lack of complete and detailed modeling information hampers a clear interpretation of results and does not provide significant insight into gender effects. In addition to gender and reproductive status, other subject characteristics might affect conversion. In a multivariate analysis concerning the impact of several biomarkers on the proportion of EPA and DHA of human erythrocytes, it was recently shown that age and BMI were positively related to the proportion of EPA + DHA in RBC [36]. However, a quantitative exploration of these latter two factors within the setting of a tracer conversion study has never been performed.

Other than being a precursor for LCPUFAs synthesis, ALA serves as an energy source and is also incorporated into membranes and fat tissue. In fact, among the possible metabolic fates for ALA, β-oxidation is quantitatively considered as the most important [17]. ALA oxidation studies in humans estimate that, within a time period of 9 - 48 hours, about 16 - 33 % of ALA is recovered as CO_2 in breath [24-27, 37, 38]. Furthermore, it is postulated that the extent of ALA oxidation determines its availability for conversion [14]. Whether the ALA and LA content of the background diet, or their ratio, modulates the extent of partitioning towards ALA oxidation is not known. Also, little is known about potential determinants of ALA oxidation. It is presumed that men oxidize more ALA than women, so that less ALA is available and shunted towards the pathway of conversion [14]. However, most of the ALA oxidation studies either focused on ALA oxidation in men [24, 26, 37, 38] or did not present separate results for men and women [27]. Burdge et al. found that men oxidize about 33 % of ingested ALA tracer, whereas in a different, but comparable study with female subjects, tracer recovery was approximately 22 % [24, 25]. Whether ALA oxidation is truly gender dependent, has not yet been appropriately addressed.

EFFECTS OF ALA VERSUS THOSE OF LA AND EPA/DHA ON CARDIOVASCULAR DISEASE RISK FACTORS

For the last decades, many studies have focused on the effects of EPA and DHA on CVD risk factors. Their effects on lipoprotein levels have received a lot of attention. Although findings are not equivocal, results do indicate that fish fatty acids characteristically decrease serum triacylglycerol concentrations (TG) [9, 11, 12, 39]. HDL concentrations, however, are generally unaffected whereas LDL cholesterol concentrations seem to increase slightly, particularly in hypertriacylglycerolemic subjects [12]. These specific properties of fish fatty acids are probably not typical for ALA, their plant derived parent fatty acid [11]. Findings from a sparse number of dietary intervention studies suggest that ALA has similar effects on serum lipid levels as its n-6 fatty acid analog LA [21, 40-42]. Effects of the ALA and LA ratio can however not be excluded. A controlled human intervention study, to distinguish directly the effects of the ALA to LA ratio from those of dietary ALA and LA on lipoprotein levels, lipoprotein subclass distributions and particle sizes, does not exist. Furthermore, the number of studies that have compared the effects of EPA and DHA with those of ALA on CVD risk markers other than serum lipid concentrations is extremely scarce. The few recent study findings that do exist, suggest that plant and marine n-3 fatty acids have a similar influence on blood coagulation and fibrinolytic factors [23, 43, 44]. Furthermore, recent findings suggest that n-3 fatty acids have favorable effects on endothelial markers [45-50]. Since most of the studies have been performed in young or middle-aged subjects, it is not known whether effects of n-3 fatty acids on CVD risk markers can be extended to an elderly population over the age of 60 years. As the subgroup of aged people is steadily growing and the CVD risk increases with age, they might benefit from a dietary modulation with n-3 fatty acids [51, 52].

OUTLINE OF THE THESIS

This thesis focuses on the effects of dietary ALA, LA and their ratio on conversion of n-3 fatty acids in humans and on cardiovascular risk markers. **Chapter 2** describes the development of the compartmental model for quantification of n-3 fatty acid conversion following a longer-term intake of multiple uniformly labeled [^{13}C]ALA boluses. The modeling assumptions, model predictions, kinetic calculations, and the advantages and restrictions of the modeling approach are discussed in detail. **Chapter 3** focuses on the implementation of this kinetic model to disentangle the effects of an increase in dietary ALA, a decrease in dietary LA and an increase in the ALA to LA ratio on the conversion of dietary ALA. The influence of gender, reproductive status, age and fat

mass as potential determinants of ALA metabolism were explored in **Chapter 4**. **Chapter 5** unravels the effects of ALA, LA and their ratio on serum lipid profile and lipoprotein subclass distributions. **Chapter 6** compares the effect of ALA with those of EPA/DHA on cardiovascular risk markers in elderly subjects between 60 - 78 y. The General Discussion, **Chapter 7**, addresses the main outcomes and implications of these studies. In addition, suggestions for future studies are provided.

REFERENCES

1 Hornstra G. Essential fatty acids in mothers and their neonates. Am J Clin Nutr 2000; 71:1262S-9S.
2 Sprecher H. Metabolism of highly unsaturated n-3 and n-6 fatty acids. Biochim Biophys Acta 2000; 1486:219-31.
3 Voss A, Reinhart M, Sankarappa S, Sprecher H. The metabolism of 7,10,13,16,19-docosapentaenoic acid to 4,7,10,13,16,19-docosahexaenoic acid in rat liver is independent of a 4-desaturase. J Biol Chem 1991; 266:19995-20000.
4 Lemaitre RN, King IB, Mozaffarian D, Kuller LH, Tracy RP, Siscovick DS. n-3 Polyunsaturated fatty acids, fatal ischemic heart disease, and nonfatal myocardial infarction in older adults: the Cardiovascular Health Study. Am J Clin Nutr 2003; 77:319-25.
5 Das UN. Beneficial effect(s) of n-3 fatty acids in cardiovascular diseases: but, why and how? Prostaglandins Leukot Essent Fatty Acids 2000; 63:351-62.
6 Kris-Etherton PM, Harris WS, Appel LJ. Fish consumption, fish oil, omega-3 fatty acids, and cardiovascular disease. Circulation 2002; 106:2747-57.
7 Hornstra G. Influence of dietary fat type on arterial thrombosis tendency. J Nutr Health Aging 2001; 5:160-6.
8 Vanschoonbeek K, de Maat MP, Heemskerk JW. Fish oil consumption and reduction of arterial disease. J Nutr 2003; 133:657-60.
9 Wijendran V, Hayes KC. Dietary n-6 and n-3 fatty acid balance and cardiovascular health. Annu Rev Nutr 2004; 24:597-615.
10 Geelen A, Brouwer IA, Zock PL, Katan MB. Antiarrhythmic effects of n-3 fatty acids: evidence from human studies. Curr Opin Lipidol 2004; 15:25-30.
11 Harris WS. n-3 fatty acids and serum lipoproteins: human studies. Am J Clin Nutr 1997; 65:1645S-1654S.
12 Harris WS. Fish oils and plasma lipid and lipoprotein metabolism in humans: a critical review. J Lipid Res 1989; 30:785-807.
13 Knapp HR. Dietary fatty acids in human thrombosis and hemostasis. Am J Clin Nutr 1997; 65:1687S-1698S.
14 Burdge G. Alpha-linolenic acid metabolism in men and women: nutritional and biological implications. Curr Opin Clin Nutr Metab Care 2004; 7:137-44.
15 Burdge GC, Calder PC. Conversion of alpha-linolenic acid to longer-chain polyunsaturated fatty acids in human adults. Reprod Nutr Dev 2005; 45:581-97.
16 Sinclair AJ, Attar-Bashi NM, Li D. What is the role of alpha-linolenic acid for mammals? Lipids 2002; 37:1113-23.
17 Brenna JT. Efficiency of conversion of alpha-linolenic acid to long chain n-3 fatty acids in man. Curr Opin Clin Nutr Metab Care 2002; 5:127-32.
18 Williams CM, Burdge G. Long-chain n-3 PUFA: plant v. marine sources. Proc Nutr Soc 2006; 65:42-50.
19 Hussein N, Ah-Sing E, Wilkinson P, Leach C, Griffin BA, Millward DJ. Long-chain conversion of [^{13}C]linoleic acid and alpha-linolenic acid in response to marked changes in their dietary intake in men. J Lipid Res 2005; 46:269-80.
20 Kelley DS, Nelson GJ, Love JE, Branch LB, Taylor PC, Schmidt PC, Mackey BE, Iacono JM. Dietary alpha-linolenic acid alters tissue fatty acid composition, but not blood lipids, lipoproteins or coagulation status in humans. Lipids 1993; 28:533-7.

21 Mantzioris E, James MJ, Gibson RA, Cleland LG. Dietary substitution with an alpha-linolenic acid-rich vegetable oil increases eicosapentaenoic acid concentrations in tissues. Am J Clin Nutr 1994; 59:1304-9.

22 Valsta LM, Salminen I, Aro A, Mutanen M. Alpha-linolenic acid in rapeseed oil partly compensates for the effect of fish restriction on plasma long chain n-3 fatty acids. Eur J Clin Nutr 1996; 50:229-35.

23 Finnegan YE, Minihane AM, Leigh-Firbank EC, Kew S, Meijer GW, Muggli R, Calder PC, Williams CM. Plant- and marine-derived n-3 polyunsaturated fatty acids have differential effects on fasting and postprandial blood lipid concentrations and on the susceptibility of LDL to oxidative modification in moderately hyperlipidemic subjects. Am J Clin Nutr 2003; 77:783-95.

24 Burdge GC, Jones AE, Wootton SA. Eicosapentaenoic and docosapentaenoic acids are the principal products of alpha-linolenic acid metabolism in young men*. Br J Nutr 2002; 88:355-63.

25 Burdge GC, Wootton SA. Conversion of alpha-linolenic acid to eicosapentaenoic, docosapentaenoic and docosahexaenoic acids in young women. Br J Nutr 2002; 88:411-20.

26 Burdge GC, Finnegan YE, Minihane AM, Williams CM, Wootton SA. Effect of altered dietary n-3 fatty acid intake upon plasma lipid fatty acid composition, conversion of [^{13}C]alpha-linolenic acid to longer-chain fatty acids and partitioning towards beta-oxidation in older men. Br J Nutr 2003; 90:311-21.

27 Vermunt SH, Mensink RP, Simonis MM, Hornstra G. Effects of dietary alpha-linolenic acid on the conversion and oxidation of ^{13}C-alpha-linolenic acid. Lipids 2000; 35:137-42.

28 Pawlosky RJ, Hibbeln JR, Novotny JA, Salem N, Jr. Physiological compartmental analysis of alpha-linolenic acid metabolism in adult humans. J Lipid Res 2001; 42:1257-65.

29 Pawlosky RJ, Hibbeln JR, Lin Y, Goodson S, Riggs P, Sebring N, Brown GL, Salem N, Jr. Effects of beef- and fish-based diets on the kinetics of n-3 fatty acid metabolism in human subjects. Am J Clin Nutr 2003; 77:565-72.

30 Emken EA, Adlof RO, Duval SM, Nelson GJ. Effect of dietary docosahexaenoic acid on desaturation and uptake in vivo of isotope-labeled oleic, linoleic, and linolenic acids by male subjects. Lipids 1999; 34:785-91.

31 Emken EA, Adlof RO, Gulley RM. Dietary linoleic acid influences desaturation and acylation of deuterium-labeled linoleic and linolenic acids in young adult males. Biochim Biophys Acta 1994; 1213:277-88.

32 Gerster H. Can adults adequately convert alpha-linolenic acid (18:3n-3) to eicosapentaenoic acid (20:5n-3) and docosahexaenoic acid (22:6n-3)? Int J Vitam Nutr Res 1998; 68:159-73.

33 Giltay EJ, Gooren LJ, Toorians AW, Katan MB, Zock PL. Docosahexaenoic acid concentrations are higher in women than in men because of estrogenic effects. Am J Clin Nutr 2004; 80:1167-74.

34 Giltay EJ, Duschek EJ, Katan MB, Zock PL, Neele SJ, Netelenbos JC. Raloxifene and hormone replacement therapy increase arachidonic acid and docosahexaenoic acid levels in postmenopausal women. J Endocrinol 2004; 182:399-408.

35 Pawlosky R, Hibbeln J, Lin Y, Salem N, Jr. n-3 fatty acid metabolism in women. Br J Nutr 2003; 90:993-4; discussion 994-5.

36 Sands SA, Reid KJ, Windsor SL, Harris WS. The impact of age, body mass index, and fish intake on the EPA and DHA content of human erythrocytes. Lipids 2005; 40:343-7.

37 Bretillon L, Chardigny JM, Sebedio JL, Noel JP, Scrimgeour CM, Fernie CE, Loreau O, Gachon P, Beaufrere B. Isomerization increases the postprandial oxidation of linoleic acid but not alpha-linolenic acid in men. J Lipid Res 2001; 42:995-7.

38 DeLany JP, Windhauser MM, Champagne CM, Bray GA. Differential oxidation of individual dietary fatty acids in humans. Am J Clin Nutr 2000; 72:905-11.

39 Harris WS. n-3 Long-chain polyunsaturated fatty acids reduce risk of coronary heart disease death: extending the evidence to the elderly. Am J Clin Nutr 2003; 77:279-80.

40 Pang D, Allman-Farinelli MA, Wong T, Barnes R, Kingham KM. Replacement of linoleic acid with alpha-linolenic acid does not alter blood lipids in normolipidaemic men. Br J Nutr 1998; 80:163-7.

41 Valsta LM, Jauhiainen M, Aro A, Salminen I, Mutanen M. The effects on serum lipoprotein levels of two monounsaturated fat rich diets differing in their linoleic and a-linolenic acid contents. Nutr Metab Cardiovasc Dis 1995; 5:129-140.

42 Bemelmans WJ, Broer J, Feskens EJ, Smit AJ, Muskiet FA, Lefrandt JD, Bom VJ, May JF, Meyboom-de Jong B. Effect of an increased intake of alpha-linolenic acid and group nutritional education on cardiovascular risk factors: the Mediterranean Alpha-linolenic Enriched Groningen Dietary Intervention (MARGARIN) study. Am J Clin Nutr 2002; 75:221-7.

43 Finnegan YE, Howarth D, Minihane AM, Kew S, Miller GJ, Calder PC, Williams CM. Plant and marine derived (n-3) polyunsaturated fatty acids do not affect blood coagulation and fibrinolytic factors in moderately hyperlipidemic humans. J Nutr 2003; 133:2210-3.

44 Freese R, Mutanen M. Alpha-linolenic acid and marine long-chain n-3 fatty acids differ only slightly in their effects on hemostatic factors in healthy subjects. Am J Clin Nutr 1997; 66:591-8.
45 Baro L, Fonolla J, Pena JL, Martinez-Ferez A, Lucena A, Jimenez J, Boza JJ, Lopez-Huertas E. n-3 Fatty acids plus oleic acid and vitamin supplemented milk consumption reduces total and LDL cholesterol, homocysteine and levels of endothelial adhesion molecules in healthy humans. Clin Nutr 2003; 22:175-82.
46 Berstad P, Seljeflot I, Veierod MB, Hjerkinn EM, Arnesen H, Pedersen JI. Supplementation with fish oil affects the association between very long-chain n-3 polyunsaturated fatty acids in serum non-esterified fatty acids and soluble vascular cell adhesion molecule-1. Clin Sci (Lond) 2003; 105:13-20.
47 Hjerkinn EM, Seljeflot I, Ellingsen I, Berstad P, Hjermann I, Sandvik L, Arnesen H. Influence of long-term intervention with dietary counseling, long-chain n-3 fatty acid supplements, or both on circulating markers of endothelial activation in men with long-standing hyperlipidemia. Am J Clin Nutr 2005; 81:583-9.
48 Thies F, Miles EA, Nebe-von-Caron G, Powell JR, Hurst TL, Newsholme EA, Calder PC. Influence of dietary supplementation with long-chain n-3 or n-6 polyunsaturated fatty acids on blood inflammatory cell populations and functions and on plasma soluble adhesion molecules in healthy adults. Lipids 2001; 36:1183-93.
49 Rallidis LS, Paschos G, Papaioannou ML, Liakos GK, Panagiotakos DB, Anastasiadis G, Zampelas A. The effect of diet enriched with alpha-linolenic acid on soluble cellular adhesion molecules in dyslipidaemic patients. Atherosclerosis 2004; 174:127-32.
50 Miles EA, Thies F, Wallace FA, Powell JR, Hurst TL, Newsholme EA, Calder PC. Influence of age and dietary fish oil on plasma soluble adhesion molecule concentrations. Clin Sci (Lond) 2001; 100:91-100.
51 Mozaffarian D, Kumanyika SK, Lemaitre RN, Olson JL, Burke GL, Siscovick DS. Cereal, fruit, and vegetable fiber intake and the risk of cardiovascular disease in elderly individuals. JAMA 2003; 289:1659-66.
52 Mozaffarian D, Lemaitre RN, Kuller LH, Burke GL, Tracy RP, Siscovick DS. Cardiac benefits of fish consumption may depend on the type of fish meal consumed: the Cardiovascular Health Study. Circulation 2003; 107:1372-7.

CHAPTER 2

Compartmental modeling to quantify α-linolenic acid conversion after longer term intake of multiple tracer boluses

Petra L. L. Goyens, Mary E. Spilker, Peter L. Zock, Martijn B. Katan, and Ronald P. Mensink

Based on
Journal of Lipid Research 2005; 46:1474-1483.

ABSTRACT

To estimate *in vivo* α-linolenic acid (ALA; C18:3n-3) conversion, 29 healthy subjects consumed for 28 days a diet providing 7 % of energy from linoleic acid (LA; C18:2n-6) and 0.4 % from ALA. On day 19, subjects received a single bolus of 30 mg of uniformly labeled [^{13}C]ALA and for the next 8 days 10 mg twice daily. Fasting plasma phospholipid concentrations of ^{12}C- and ^{13}C-labeled ALA, eicosapentaenoic acid (EPA; C20:5n-3), docosapentaenoic acid (DPA; C22:5n-3), and docosahexaenoic acid (DHA; C22:6n-3) were determined on days 19, 21, 23, 26, 27, and 28. To estimate hepatic conversion of n-3 fatty acids, a tracer model was developed based on the averaged ^{13}C data of the participants. A similar tracee model was solved using the averaged ^{12}C values, the kinetic parameters derived from the tracer model, and mean ALA consumption. ALA incorporation into plasma phospholipids was estimated by solving both models simultaneously. It was found that nearly 7 % of dietary ALA was incorporated into plasma phospholipids. From this pool, 99.8 % was converted into EPA, and 1 % was converted into DPA and subsequently into DHA.

Conclusion

The limited incorporation of dietary ALA into the hepatic phospholipid pool contributes to the low hepatic conversion of ALA into EPA. A low conversion of ALA-derived EPA into DPA might be an additional obstacle for DHA synthesis.

INTRODUCTION

α-Linolenic acid (ALA; C18:3n-3) is an essential fatty acid of the n-3 family, that is present in unhydrogenated canola and soybean oils and in foods prepared with these oils [1-3]. Humans are unable to synthesize ALA because they lack the necessary Δ-15 desaturase enzymes [4-6]. Therefore, ALA must be provided in adequate amounts through the diet. After consumption, ALA can be converted in the liver into longer and more unsaturated fatty acids such as eicosapentaenoic acid (EPA; C20:5n-3) and docosahexaenoic acid (DHA; C22:6n-3). These latter two fatty acids, which are also present in fatty fish, play an essential role in many physiological processes [7]. Whether ALA is a useful source for EPA and DHA synthesis depends on the efficacy of ALA conversion.

Several animal and human intervention studies have examined the effects of diets rich in ALA on n-3 fatty acid metabolism and accretion in tissues [8-10]. Although the results indicate that ALA is converted, these studies only allow a qualitative or semi quantitative description of n-3 metabolism. In contrast, the use of stable isotopes offers a means to assess quantitatively the *in vivo* conversion of ALA [11]. Nevertheless, quantification of the separate conversion reactions remains complex. The few studies that were performed with deuterated or ^{13}C-labeled ALA tracers mostly used area under the curve (AUC) values, which give a global impression of n-3 fatty acid conversion [12 15]. Compartmental modeling, however, provides more accurate estimates of the various metabolic parameters underlying the n-3 fatty acid cascade. The first study to apply compartmental modeling to quantify the conversion of ALA in adults was published by Pawlosky et al. [16]. In that study, the conversion of ALA was examined after oral administration of a single 1 g dose of deuterated ALA, which was quite high compared with daily ALA intake. In addition, enrichments of n-3 fatty acids were measured in total plasma lipids, although the fatty acid composition of plasma phospholipids may more closely resemble hepatic n-3 fatty acid metabolism. Therefore, we decided to use compartmental modeling to quantify ALA conversion after ingestion of multiple trace amounts of uniformly labeled [^{13}C]ALA ([U-^{13}C]ALA) for 9 days, and enrichments of ALA and its long-chain polyunsaturated fatty acids (LCPUFAs) were measured in plasma phospholipids.

MATERIALS AND METHODS

Subjects

Thirty healthy volunteers (15 men and 15 women) participated in the study. One male subject was excluded before analysis of the results because of gastrointestinal complaints and related weight loss during the study. The mean ± SD age of the remaining 29 subjects was 49.9 ± 13.4 years (range, 21 - 63 years). Volunteers did not use medication, had a stable body weight for at least 3 months preceding the study (< 3 kg loss or gain of weight), and had a body mass index of 24.3 ± 3.1 kg/m^2. The study protocol was approved by the Medical Ethics Committee of Maastricht University, and written informed consent was obtained from each participant.

Diet

This tracer study was part of a dietary intervention trial that studied the effects of polyunsaturated fatty acids on cardiovascular risk markers. For this part of the project, only data from the 4 week run-in period were used, during which all subjects received the same control diet. At the start of the study, each subject weighed and recorded his or her food intake for 3 consecutive days: 2 working days and 1 weekend day. Energy intake was calculated using the Dutch food composition table, and each subject was assigned a diet that met his or her energy requirement [17]. To this end, nine different diets were formulated with varying amounts of energy (7.5 - 13.4 MJ). The target composition of the diet consumed during the first four weeks consisted of 15 percent of energy (En%) protein, 50 En% carbohydrates, and 35 En% fat (13 En% saturated fatty acids, 13 En% monounsaturated fatty acids, 7 En% linoleic acid (LA), and 0.4 En% ALA). Thus, the ALA:LA ratio of the control diet was 1:19. EPA and DHA intakes were less than 0.1 En%. To achieve these intakes, subjects received each week products such as pies, pastry, and margarine that were made from an experimental fat (**Table 1**). The margarine as well as the experimental fat, which was composed of a mixture of 30.4 % sunflower oil, 33.1 % olive oil, 11.5 % rapeseed oil, and 25 % hardstock made from fully hydrogenated palm kernel and palm oils, were made by NIZO Food Research (Ede, The Netherlands). Depending on energy intake, the products supplied provided 62 - 71 % of total fat intake or 22 - 25 En% of total energy. In addition, subjects were given strict written dietary guidelines concerning the preparation and consumption of other food items. The use of fish or seafood was prohibited during the entire study period. Body weight was monitored weekly. Subjects were assigned to another energy intake level whenever weight changed by > 2 kg compared with the body weight at trial entry.

Table 1
Fatty acid composition of the experimental fat

	g/100 g Fatty acids
Saturated fatty acids	29.3
Monounsaturated fatty acids	41.0
Polyunsaturated fatty acids	29.4
LA	27.9
ALA	1.3

LA, linoleic acid; ALA, α-linolenic acid.

Tracer protocol and blood sampling

[U-^{13}C]ALA was purchased from Isotec, Inc. (Miamisburg, OH), as free fatty acid tracer with an isotopic purity of 99 %. The total amount of [U-^{13}C]ALA was dissolved in olive oil and then pipetted into capsules with a volume of 0.3 mL, such that each capsule contained 10 mg of tracer.

At day 19, 10 days before the end of the run-in period, a first blood sample was drawn (t = 0 h), after subjects had fasted for at least 12 h and abstained from alcohol for 24 h. Subjects then received an oral bolus of 30 mg of [U-^{13}C]ALA. For the next 8 days (days 20-27), subjects consumed one capsule at 8 AM. and one capsule at 8 PM. On these days, total daily [U-^{13}C]ALA intake was 20 mg. Fasting blood samples were drawn at days 21 (t = 48 h after the first tracer administration), 23 (t = 96 h), 26 (t = 168 h), 27 (t = 192 h) and 28 (t = 216 h).

Sample analysis

Blood was collected into precooled EDTA tubes and centrifuged at 2000 g (3500 rpm) for 30 min at 4 °C within 1 h after sampling. Aliquots from the midportion of the plasma were taken, snap-frozen in liquid nitrogen, and stored at -80 °C until analysis. After the trial, all samples from one subject were analyzed in the same run.

Total lipids from plasma were extracted according to a modified procedure of the Folch method with 1,2-dinonadecanoyl phosphatidylcholine as an internal standard [18]. Phospholipids were then isolated using an Extract-Clean NH_2-aminopropylsilyl column (500 mg, 4.0 mL; Alltech Associates, Inc., Deerfield, IL) and hydrolyzed and methylated into their corresponding fatty acid methyl esters (FAMEs) [19, 20]. The FAMEs were separated and quantified by means of a gas chromatograph-flame ionization detector (Perkin-Elmer Autosystem, Norwalk, CT). For separation, a CP-Sil 88 capillary column (50 m x 0.25 mm, 0.20 µm film thickness; Chrompack, Middelburg, The Netherlands) was used with helium as the carrier gas (injector inlet pressure of 130 kPa) as described previously [21]. Both the injection and the detector temperature were set at 300 °C. The temperature of the oven started at 160 °C and increased for 10 to 190 °C in steps of 3.2 °C/min. It remained at 190 °C for 15 min and then increased at 5 °C/min to 230 °C and was kept constant for 7 min.

Isotopic ^{13}C enrichments of the FAMEs of ALA, EPA, docosapentaenoic acid (DPA), and DHA were determined on a gas chromatograph-combustion-isotope ratio mass spectrometer (MAT 252; Finnigan, Bremen, Germany) with a BPX-70 column (50 m x 0.33 mm, 0.25 µm film thickness; SGE, Austin, TX) and helium as the carrier gas (injector inlet pressure of 124 kPa). The sample injection temperature was 250 °C.

Two different temperature programs were used to obtain a complete separation of the peaks of interest. For ALA, EPA, and DHA, the oven was programmed at 185 °C for 35 min and increased at 30 °C/min up to 260 °C for 33 min. For DPA, the oven was programmed at 205 °C for 20 min and increased at 30 °C/min up to 260 °C for 25 min. ^{13}C enrichments of the FAMEs were expressed as tracer-to-tracee ratios as follows [22].

$$TTR = \left(\frac{^{13}C}{^{12}C}\right)_{sample} - \left(\frac{^{13}C}{^{12}C}\right)_{background} \qquad (Eq.\ 1)$$

The tracer-to-tracee ratios were adjusted for the extra carbon atoms added to the ^{13}C-labeled fatty acids through elongation and methylation. It was assumed that these additional carbon fragments were not enriched above background. At each time point (t), the above background concentrations of the labeled (C_{TRACER}) and unlabeled (C_{TRACEE}) fatty acids were derived according to the following formulas [23]:

$$C_{TRACER}(t) = C_{TOTAL}(t) \times \left(\frac{TTR(t)}{1 + TTR(t)}\right) \qquad (Eq.\ 2)$$

and

$$C_{TRACEE}(t) = C_{TOTAL}(t) \times \left(\frac{1}{1 + TTR(t)}\right) \qquad (Eq.\ 3)$$

where $C_{TOTAL}(t)$ is the total concentration ($^{12}C + ^{13}C$) in mmol/L of a given fatty acid as determined by gas chromatography-flame ionization detection at time point (t).

Model input parameters such as the daily ALA consumption and the ^{12}C and ^{13}C n-3 fatty acid concentrations in the plasma phospholipid pool followed a normal distribution. Quantification of n-3 fatty acid conversion was carried out using compartmental modeling by means of the SAAM II version 1.2 software package (SAAM Institute, Inc., Seattle, WA). A constant standard deviation error model (SD = 0.001) was specified for each fatty acid and implemented as "data-relative" within the SAAM II modeling framework [24]. The structural model developed from the mean data was applied to each subject's data individually using PopKinetics software (SAAM Institute) and Bayesian parameter priors. The analysis resulted in maximum a posteriori Bayesian estimates of the parameters.

Chapter 2

MODEL DEVELOPMENT AND RESULTS

General modeling strategy

The main objective of a tracer study is to obtain information on tracer kinetics, which can be used to describe the kinetic behavior of the unlabeled or tracee substances [25]. Information on the kinetics of the tracer is obtained by structuring the system into a mathematical model from which the exchange, input, and output of tracer material can be resolved [26]. For our study, a structural model (**Figure 1**) was developed based on the mean tracer data of the 29 participants. Mean values were used to reduce the influence of random noise during model development. Thereafter, a structurally comparable tracee model (**Figure 2**) was set up that incorporated the kinetic parameters derived from the tracer system, the averaged values of the tracee measurements of the 29 subjects, and their mean daily dietary ALA intake. The tracer and tracee models were then solved simultaneously in order to estimate incorporation of [U-^{13}C]ALA into plasma phospholipids.

Tracer model

The final tracer model is shown in **Figure 1**. The experimental period was defined from 0 to 216 h. In agreement with the known conversions of ALA into its LCPUFAs, the main structure of the model consists of a string of 4 compartments (q1, q2, q3, and q4), that represent the total amounts (μmol) of ^{13}C-labeled ALA, EPA, DPA, and DHA, respectively, in plasma phospholipids. Because the exogenous [U-^{13}C]ALA tracer was administered orally, it enters the system via the gastro-intestinal tract, which causes a delay (d6) before its appearance into plasma phospholipids as ALA. The ALA tracer is then either irreversibly lost [k(0,j)] from the delay compartment or proceeds through the conversion cascade (k(i,j)), as represented by the arrows and their corresponding transfer rate constants. The rate constants, k(i,j), denote the fraction of tracer from the plasma phospholipid pool that is transferred per unit of time from compartment j to i. The fraction of tracer, that is irreversibly lost from each compartment j, is denoted k(0,j). Tracer n-3 fatty acid concentrations (μmol/L) were measured in plasma phospholipids as designated by the closed circles (si). Because our results were expressed in units of concentration (μmol/L) and compartmental modeling is based on the principle of mass balance, the volume of distribution, which was assumed to be the plasma volume, was incorporated. As plasma volume was not measured, it was assumed to be 4.5 % of body weight [27].

The details of the various model structures and assumptions that were tested before arriving at the final model are described below.

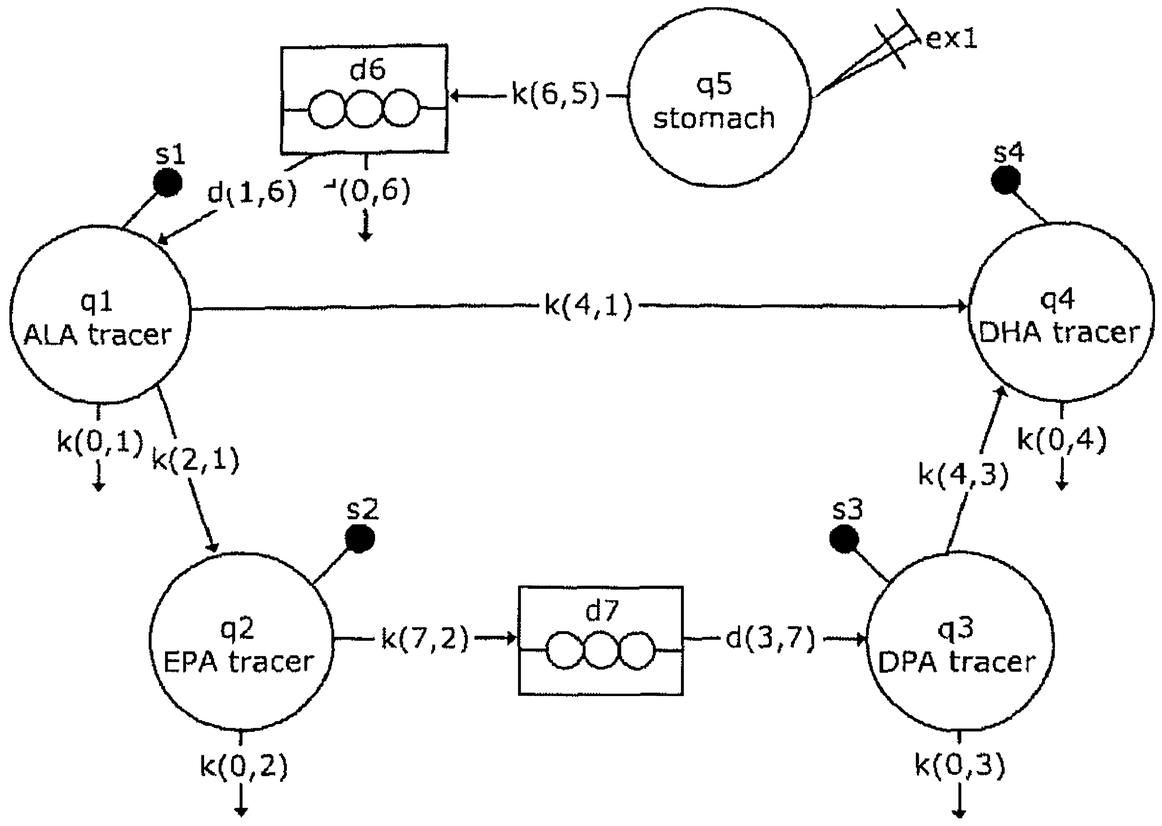

Figure 1
Tracer model for n-3 conversion
Circles denoted q1, q2, q3, and q4 represent the plasma α-linolenic acid (ALA), eicosapentaenoic acid (EPA), docosapentaenoic acid (DPA), and docosahexaenoic acid (DHA) tracer phospholipid compartments, respectively. Delay compartments, which were introduced to account for the delayed appearance of the tracer, are depicted by the rectangular boxes d6 and d7. The exogenous oral tracer input ex1 into compartment q5 is symbolized by a syringe. The small closed circles s1, s2, s3, s4 attached to each compartment represent the blood samples that were taken to measure the concentration of ^{13}C-labeled n-3 fatty acids in plasma phospholipids.

Tracer uptake

The oral boluses of the tracer (ex1) first enter the stomach, compartment q5. The assumption was made that there was no irreversible loss of tracer from the stomach. A gastric residence time of 30 min was assumed by setting the rate of gastric emptying, k(6,5), at 2 h^{-1}. The tracer then enters a delay compartment (d6), which depicts all metabolic processes between arrival of [U-^{13}C]ALA in the small intestine and the appearance of the tracer in the ALA plasma phospholipid compartment (q1). In our model, the delay consisted of a series of 5 compartments. Several models were analyzed with a physiologically relevant delay time between 3 and 5 h. Because the model was insensitive to the length of the delay time, the delay was set at 5 h. After the delay compartment, [U-^{13}C]ALA can follow two different routes: it is either irreversibly lost or it arrives in the plasma phospholipid pool. The irreversible loss, which is denoted d(0,6) = 1-incorp, includes the fraction of ALA tracer that is not absorbed, as well as the

fraction of ALA tracer that is not incorporated into ALA plasma phospholipids after intestinal uptake. The tracer, for example, can be oxidized or incorporated into nonplasma phospholipids, membranes, and tissues. The fraction of ingested [U-^{13}C]ALA that, per unit of time, appears in the plasma phospholipid compartment is defined as d(1,6) = incorp. Because this appearance could not be determined as an adjustable parameter, different values for it were tested. When appearance values were close to 5 %, model convergence was obtained. In contrast, values much greater than 5 % resulted either in nonconvergence of the model or in too high estimates of the tracee masses. Therefore, it was decided to fix the appearance parameter temporarily at 5 % to solve the tracer model. This constraint of 5 % was later replaced by a constraint equation, as detailed under the description of the tracee model.

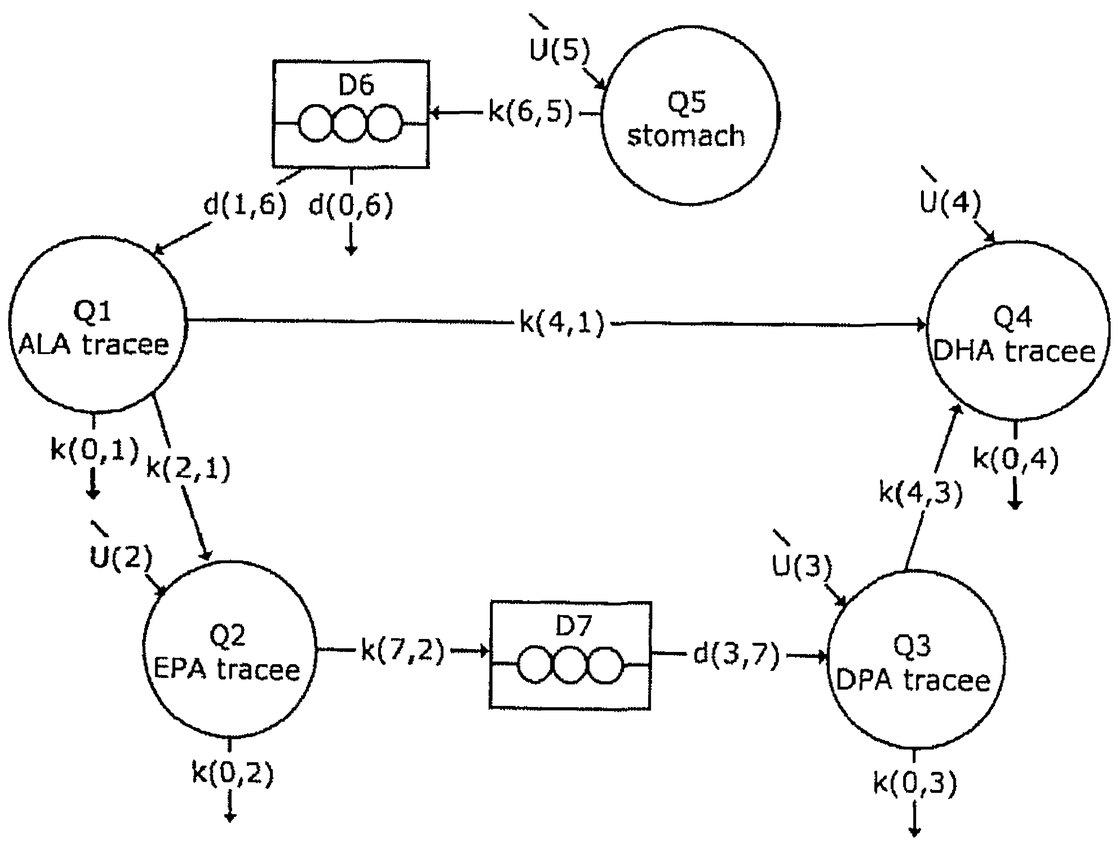

Figure 2
Tracee model for n-3 conversion
Circles denoted Q1, Q2, Q3, and Q4 represent the plasma ALA, EPA, DPA, and DHA tracee phospholipids compartments, respectively. U(5) represents the daily dietary intake of tracee ALA. The direct endogenous inputs into the EPA, DPA, and DHA tracee phospholipids compartments are given by U(2), U(3), and U(4), respectively.

ALA to EPA

The [U-^{13}C]ALA tracer present in the plasma phospholipid pool was described by a single compartment q1. The fraction of the ALA tracer irreversibly lost from q1 is depicted by k(0,1), and the fraction that was further elongated and desaturated into EPA is represented by k(2,1). The rate constant, k(0,1), was fixed at zero, as its value was close to zero, when solving the model. The plot of the predicted values and the averaged ALA tracer data is shown in **Figure 3**. The cyclical nature of the dosing protocol is clearly visible in the predicted curve. Analyzed values were on or near the nadirs of the fitted curve. This was as expected, because blood was sampled in the morning after an overnight fast and before the intake of the next capsule.

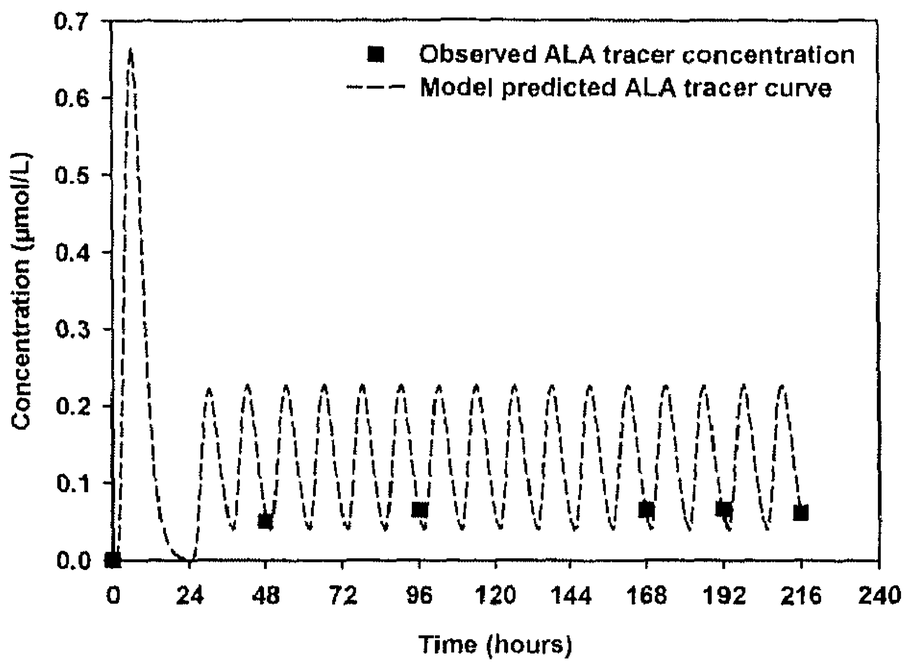

Figure 3
Model predicted fit through the observed ALA tracer data obtained with the final tracer model

EPA to DPA

The structure of the model implied that all newly formed [^{13}C]EPA originated from the plasma ALA phospholipid compartment. As observed for ALA, the predicted values also exhibited a cyclic pattern (**Figure 4**). However, the amplitudes were smaller and, because of the time needed to synthesize EPA from ALA, shifted to the right on the x axis. Unlike for ALA, the observed EPA values increased along the curve until at the end of the study an apparent plateau was reached, which was between the maximum and minimum of the predicted values.

This finding can be explained by a slow conversion of EPA into DPA or by an influx of labeled EPA from the nonphospholipid [U-^{13}C]ALA pool. The latter possibility was explored by introducing an additional input, d(2,6), into the EPA compartment from the delay compartment. This input d(2,6) was estimated by testing several models in which d(1,6) was set as a fixed or adjustable parameter, and k(2,1) was set as adjustable or equal to zero. Model convergence was obtained only when d(1,6) was fixed at 5 %, k(2,1) was fixed at zero, and k(0,1) was set as adjustable. This model was not considered further, as it was not physiologically meaningful and did not describe the EPA data significantly better than the initial model. Although not evident from our data, it cannot be ruled out that some influx of labeled EPA from the nonphospholipid [U-^{13}C]ALA pool did take place. However, combined with the information from the DPA data, as described below, the most likely explanation for the increase in observed [^{13}C]EPA over time is that the turnover of EPA to DPA is slower than that of ALA to EPA.

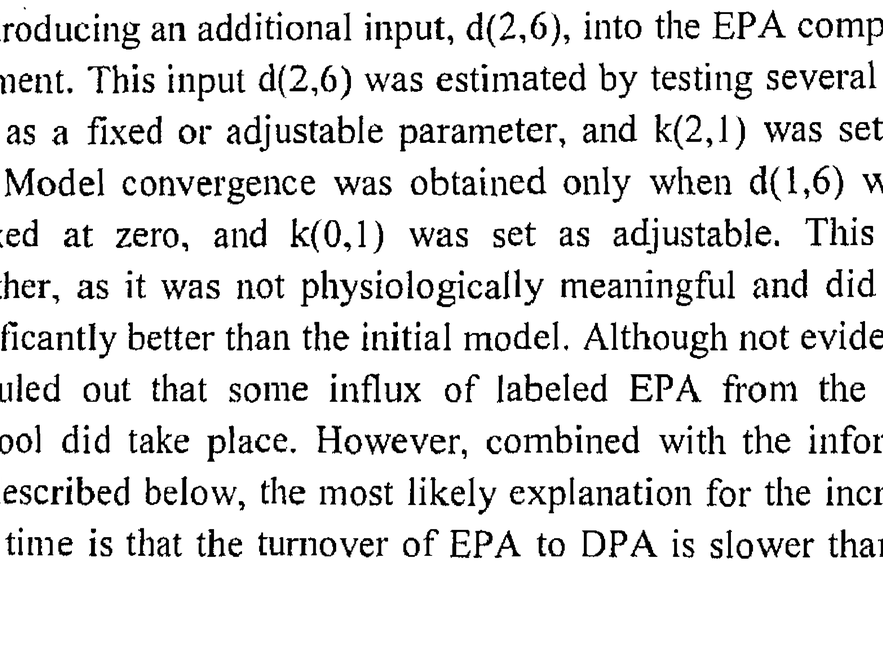

Figure 4
Model predicted fit through the observed EPA tracer data obtained with the final tracer model

DPA to DHA

Compartment q3 represents the ^{13}C-labeled DPA in plasma phospholipids, derived from [^{13}C]EPA through elongation. The irreversible loss from DPA was indistinguishable from zero, and k(0,3) therefore was fixed at zero. The plot of the predicted values (**Figure 5a**) shows that DPA was still increasing steeply by the end of the experiment, which may be one explanation for why k(0,3) was close to zero. The curve of the predicted DPA values was also very different from those of ALA and EPA. Not only was the curve still increasing, the cyclical shape resulting from the multiple input dosing protocol was reduced to minute oscillations. This indicates that conversion of EPA into DPA is much slower than conversion of ALA into EPA. Furthermore, the curve of the predicted values overestimated the first two data points, whereas it slightly underestimated the final points. As this indicated, that too much material was introduced too fast into the DPA compartment, a delay (d7) was inserted between the EPA and DPA compartments. The time of the delay was fixed at 30 h, because this resulted in the best possible description of the data (**Figure 5b**).

DHA compartment

The amount of DHA in the plasma phospholipids compartment q4 was first described by a single inflow and a single outflow of tracer. The irreversible loss, k(0,4), was small but could be estimated. The plot of the predicted DHA curve, however, showed that this model underestimated the amount of DHA during the initial phase of the study (**Figure 6a**). This implied that additional input into the DHA compartment was required to better describe the data. Therefore, two other models were examined. One model included a pathway, k(4,1), from ALA to DHA, and the other model included a pathway, k(4,2), from EPA to DHA. As k(4,1) and k(4,2) were very small, other transfer rates were not changed or were changed only slightly. As the direct conversion in the liver from ALA to DHA seemed more physiological than the conversion of plasma EPA to DHA, we formulated the final model with k(4,1). This resulted in excellent agreement between the predicted and observed values for the [^{13}C]DHA tracer (**Figure 6b**).

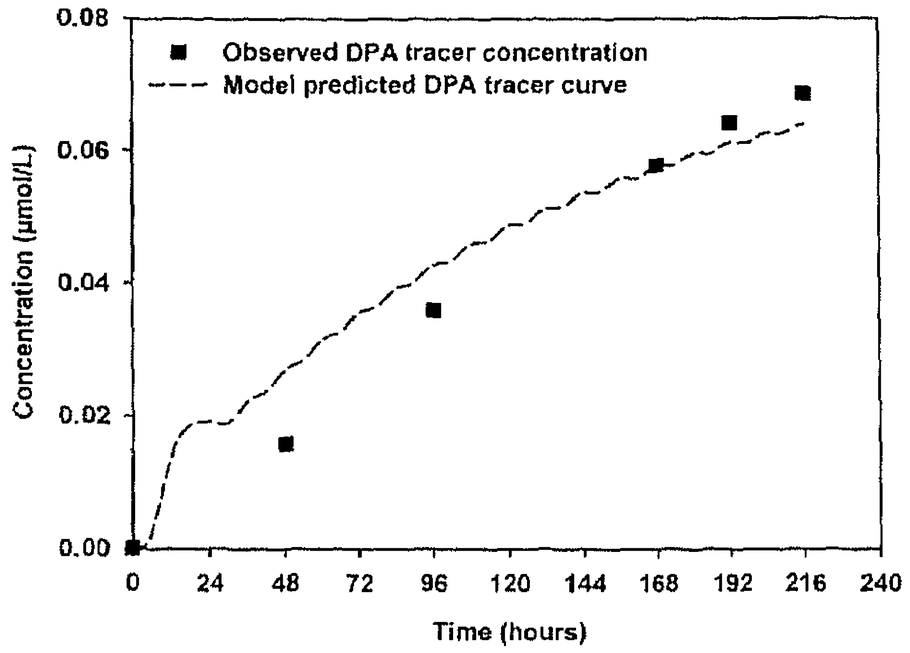

Figure 5a
Model predicted fit through the observed DPA data obtained with a model without the delay compartment d7

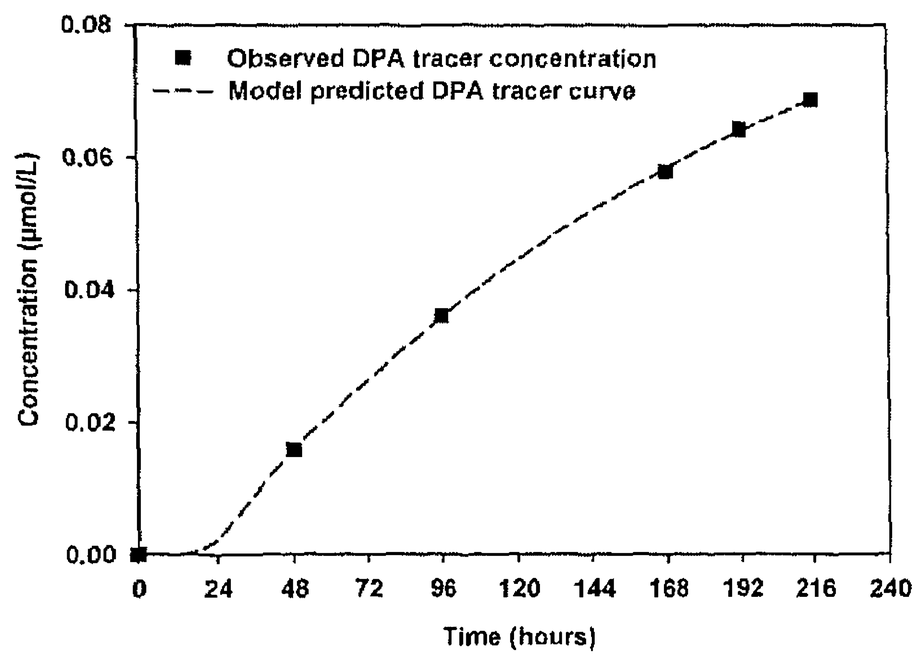

Figure 5b
Model predicted fit through the observed DPA data obtained with the final tracer model

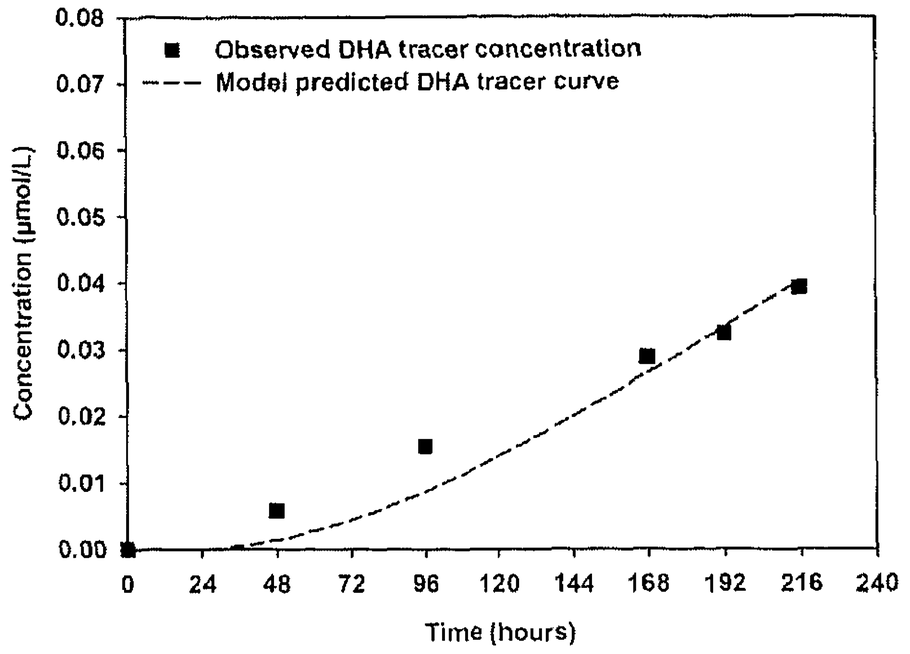

:ted fit through the observed DHA data obtained with a model without the rate
1)

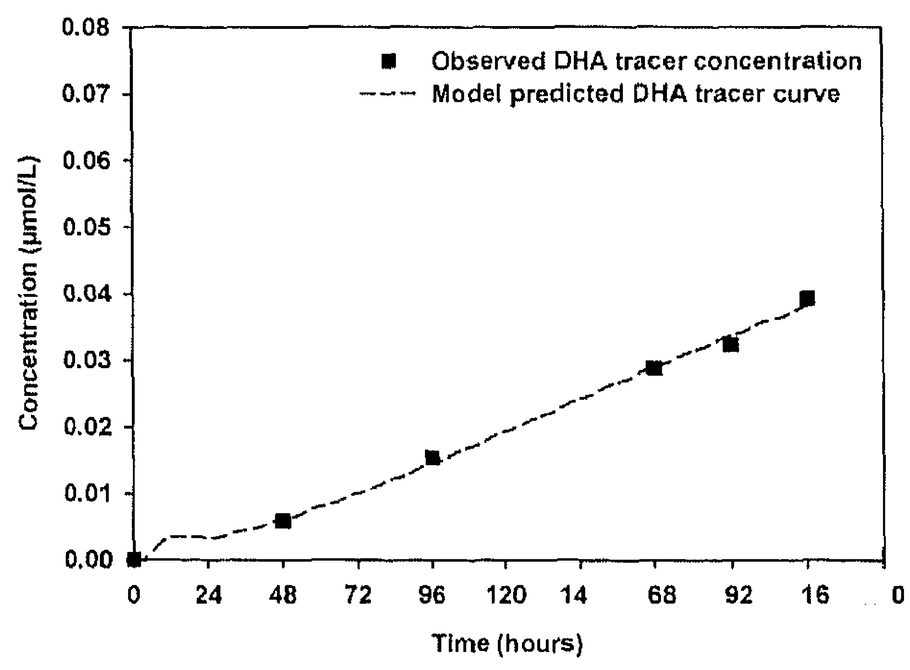

ted fit through the observed DHA data obtained with the final tracer model

Tracer Results

The rate constants describing the final model are presented in **Table 2**. The small coefficients of variation show that estimations were quite precise.

Table 2
Results of the tracer model parameters and derived variables

Transfer rates (h^{-1})	Value	Coefficient of variation
k(6,5)	2	
d(0,6)	0.93041	0.4
d(1,6)	0.06959	5.7
k(2,1)	0.44981	5.7
k(4,1)	0.00081	16.4
k(0,2)	0.48015	9.0
k(7,2)	0.00496	8.9
d(3,7)	1	
k(4,3)	0.00613	3.4
k(0,4)	0.00916	11.3

Tracee model

The rate constants obtained from the tracer model were used to calculate conversions and fluxes of the tracee data. If the tracee system is in a steady state, and the transfer rates are known from the tracer model, the differential equations that describe the tracee n-3 fatty acids system become algebraic equations that can be solved. In the present study, concentrations of the tracee n-3 fatty acids did not change systematically during the tracer experiment, as evident from the results of the GC analyses (data not shown).

As can be seen from **Figure 2**, the tracee model is structurally identical to the tracer model (**Figure 1**) and has the same k(i,j) values. The various compartments associated with tracee fatty acids are comparable to those of the ^{13}C-labeled tracer fatty acids (**Figure 1**), except that now uppercase letters (e.g. Qi, Di) are used. A main difference between the tracee and tracer model is that the tracee model contains additional input arrows denoted U(i). The arrow U(5) into compartment Q5 (stomach) of the tracee model represents the daily consumption of tracee ALA and is expressed as a continuous input (μmol/h). Also, three other direct endogenous inputs, U(2), U(3), and U(4), were created into the EPA, DPA, and DHA compartments, respectively. Furthermore, to estimate the incorporation of dietary ALA into the ALA plasma phospholipid compartment, a constraint equation was incorporated, which could be solved by resolving the tracer and tracee model simultaneously.

The derivation of the constraint equation and the rationale for introducing the endogenous inputs U(i) are described below.

Appearance constraint

Recall that for the development of the tracer model, the appearance of the tracer in the ALA compartment d(1,6) was temporarily fixed at 5 %. To obtain a more accurate estimate for incorporation into the ALA plasma phospholipid compartment, additional information was provided by the known daily intake of dietary ALA and the concentration of tracee n-3 fatty acids into plasma phospholipids. The constraint equation was based on the concept that, to keep the tracee system in a steady-state situation, the maximal input of tracee ALA into the ALA compartment is equal to the sum of tracee ALA that is lost from this compartment.

Tracee ALA in the plasma phospholipid pool can originate from dietary ALA as well as from ALA stored in endogenous depots. It was not possible to estimate both inputs at the same time, and there was no quantitative information on the fraction of endogenous input or the proportion of the endogenous input and the dietary absorption. Therefore, we assumed that all of the tracee ALA came from the diet. The adopted constraint equation was derived as described below.

First, the total ALA output from compartment Q1 was calculated as

$$ALA_{OUTPUT} = Q_1 \times [k(2,1) + k(0,1) + k(4,1)] \qquad (Eq.\ 4)$$

or equivalently

$$ALA_{OUTPUT} = C_{ALA} \times V_{ALA} \times [k(2,1) + k(0,1) + k(4,1)] \qquad (Eq.\ 5)$$

where Q_1 = the mass of the ALA tracee compartment, C_{ALA} = the concentration (μmol/L) of tracee ALA in plasma phospholipids, V_{ALA} = plasma volume (liters), estimated as 4.5 % of body weight

The total dietary ALA input into the plasma ALA phospholipid compartment (Q1) was given by

$$ALA_{UPTAKE} = d(1,6) \times U(5) \qquad (Eq.\ 6)$$

As the fractional output d(1,6) from the delay compartment into compartment Q1 was defined as

$$d(1,6) = incorp \qquad (Eq.\ 7)$$

the ALA uptake could be rewritten as

$$ALA_{UPTAKE} = incorp \times U(5) \qquad (Eq.\ 8)$$

Furthermore, because at steady state the input into Q1 equaled the output from Q1, ALA_{UPTAKE} could be presented as

$$ALA_{UPTAKE} = ALA_{OUTPUT} \qquad (Eq.\ 9)$$

or alternatively

$$incorp \times U(5) = C_{ALA} \times V_{ALA} \times [k(2,1) + k(0,1) + k(4,1)] \qquad (Eq.\ 10)$$

The tracer and tracee models were then linked by the following constraint equation

$$incorp = \frac{ALA_{OUTPUT}}{U(5)} = \frac{C_{ALA} \times V_{ALA} \times [k(2,1) + k(0,1) + k(4,1)]}{U(5)} \qquad (Eq.\ 11)$$

and both models were then solved simultaneously.

Endogenous inputs

Initially, when the tracee model was solved, it was assumed that the tracee fatty acids EPA, DPA, and DHA in plasma phospholipids originated directly from Q1. However, the compartmental masses of these LCPUFAs were then underestimated, which indicated that the EPA, DPA, and DHA compartments were also fed via other routes. Therefore, endogenous input routes U(2), U(3), and U(4) were introduced into the model.

Calculations

The steady state masses in Qi were obtained by multiplying the ^{12}C-labeled fatty acid concentrations with 4.5 % of the average body weight of the 29 participants, which was 73.3 kg. The tracee flux (μmol/h) from compartment j to i was calculated by multiplying the compartmental tracee mass Qj with the rate constant k(i,j). Similarly, the irreversible flux out of compartment j was calculated by multiplying compartmental tracee mass Qj with the rate constant k(0,j).

The proportion of fatty acid transferred from compartment j to i was defined as follows:

$$\text{frac\%_ i, j} = \frac{k(i, j)}{k(j, j)} \times 100\% \qquad \textit{(Eq. 12)}$$

where k(j,j) represented the sum of all losses from compartment j.
The relative contribution of the endogenous flux U(i) (mass/h) could be determined for EPA, DPA, and DHA. Because the total tracee influx into compartment Q(i) was equal to the sum of the separate influxes, the fractional contribution of U(i) was calculated as

$$\text{frac\%_U(i)} = \frac{U(i)}{U(i) + \sum_{\substack{j=1 \\ j \neq i}}^{n} Q j \times k(i, j)} \times 100\% \qquad \textit{(Eq. 13)}$$

RESULTS

The steady-state compartmental masses of the tracee n-3 fatty acids, the tracee fluxes, as well as the endogenous inputs are shown in **Table 3**. The incorporation of dietary ALA into plasma phospholipids and the subsequent conversion to its n-3 fatty acid derivatives, expressed in percentages and absolute amounts of dietary ALA, are given in **Table 4**.

Values were first calculated using averaged data from the 29 subjects. The average daily ALA intake equaled 1129 mg or 4056 μmol. Approximately 78.5 mg or 6.96 % of dietary ALA was incorporated as ALA into plasma phospholipids. Of this ALA pool, 99.98 % was converted to EPA, which corresponded to 6.95 % (78.4 mg) of ALA intake. The remaining 0.18 % of the ALA plasma phospholipid pool, which was equivalent to 0.013 % (0.14 mg) of ALA in the diet, was converted directly to DHA in the liver, before it appeared in the plasma phospholipids as DHA. Only 1 % of the EPA in plasma phospholipids, which was equivalent to 0.07 % (0.80 mg) of ALA consumption, was converted to DPA. All DPA from the plasma phospholipid pool was converted into DHA. Thus, the total amount of ALA from the diet that was ultimately converted to DHA was 0.08 % (0.94 mg). As can be seen from **Table 4**, the estimates based on the individual values were essentially similar.

Table 3
Results of the tracee model parameters and derived variables

Parameter		Value	Coefficient of variation
Compartmental tracee mass (μmol)			
Q5	Stomach	84.51	
Q1	ALA	26.10	
Q2	EPA	92.41	
Q3	DPA	113.55	
Q4	DHA	397.41	
Tracee fluxes (μmol/h)			
Flux(6,5)	Stomach → delay d6	169.010	
Flux(1,6)	Delay → ALA compartment	11.761	5.72
Flux(0,6)	Loss from delay	157.249	0.43
Flux(2,1)	ALA → EPA	11.740	5.73
Flux(4,1)	ALA → DHA	0.021	16.36
Flux(7,2) = Flux(3,7)	EPA → delay → DPA	0.459	8.89
Flux(0,2)	Loss from EPA compartment	0.021	9.03
Flux(4,3)	DPA → DHA	0.696	3.39
Flux(0,4)	Loss from DHA compartment	3.642	11.34
Endogenous input (μmol/h)			
U(5)	Into stomach	169.01	
U(2)	Into EPA	33.09	11.7
U(3)	Into DPA	0.24	19.6
U(4)	Into DHA	2.92	13.7

ALA, α-linolenic acid; EPA, eicosapentaenoic acid; DPA, docosapentaenoic acid; DHA, docosahexaenoic acid.

Table 4
Incorporation of dietary ALA into plasma phospholipids and subsequent conversion to its n-3 fatty acid derivatives expressed in percentage and absolute amounts of dietary ALA

Incorporation and conversion	Based on averaged data of 29 subjects	Based on individual data of 29 subjects			
	Value	Mean	SD	Minimum	Maximum
Dietary ALA intake or U(5) (mg/d)	1129	1129	124	907	1369
Incorporation of dietary ALA into ALA compartment (%)	6.96	7.72	3.25	1.88	15.69
Percentage of dietary ALA converted from					
ALA → EPA	6.946	7.705	3.24	1.88	15.68
ALA → DHA	0.013	0.016	0.03	0.00	0.16
ALA → EPA → DPA → DHA	0.071	0.073	0.04	0.02	0.20
Incorporation of dietary ALA into ALA compartment (mg)	78.54	6.28	35.31	20.81	173.27
Absolute amount (mg) of dietary ALA converted from					
ALA → EPA	78.39	86.11	35.25	20.73	173.23
ALA → DHA	0.14	0.17	0.31	0.00	1.54
ALA → EPA → DPA → DHA	0.80	0.82	0.43	0.22	2.05

ALA, α-linolenic acid; EPA, eicosapentaenoic acid; DPA, docosapentaenoic acid; DHA, docosahexaenoic acid.

Table 5
Percentage fractional contribution of endogenous inputs and percentage fractional transfers

Contribution and transfer		Based on averaged data of 29 subjects	Based on individual data of 29 subjects			
		Value	Mean	SD	Minimum	Maximum
Percentage fractional transfer						
Incorp%	Into ALA compartment	6.96	7.72	3.25	1.88	15.69
Frac%_02	Loss from EPA compartment	98.98	98.95	0.52	97.90	99.69
Frac%_21	ALA → EPA	99.82	99.81	0.29	98.85	100.00
Frac%_41	ALA → DHA	0.18	0.19	0.29	0.00	1.15
Frac%_72	EPA → DPA	1.02	1.05	0.52	0.33	2.10
Frac%_43	DPA → DHA	100.00	100.00	0.00	100.00	100.00
Percentage fractional contribution of U(i)						
Frac%_U2	Endogenous input into EPA compartment	73.81	73.78	4.70	65.21	82.43
Frac%_U3	Endogenous input into DPA compartment	34.11	34.10	25.30	0.00	80.06
Frac%_U4	Endogenous input into DHA compartment	80.31	64.29	38.30	0.00	97.10

ALA, α-linolenic acid; EPA, eicosapentaenoic acid; DPA, docosapentaenoic acid; DHA, docosahexaenoic acid.

Table 5 shows that there was considerable endogenous input of each of the ^{12}C-labeled tracee fatty acids into the EPA, DPA, and DHA plasma phospholipid pools. For example, U(2) corresponded to 33.09 μmol/h ^{12}C-labeled EPA, or 73.8 % of the total flux into the EPA plasma phospholipids pool that was not derived from the ALA plasma phospholipid pool. This EPA could have originated from sea food, which had to be consumed before the start of the study, as intake of these products was prohibited during the study. It is also possible that this EPA was partly derived from ALA, which was consumed before or during the tracer study and stored in tissues other than plasma phospholipids. Similarly, the endogenous input [U(3)] explained 34.1 % of the total inflow into the DPA plasma phospholipid pool, whereas 80.3 % of total inflow into the DHA compartment was DHA obtained from non-phospholipids sources [U(4)]. Except for the mean endogenous inflow into the DHA compartment, the estimates based on individual values were very comparable to the estimates based on the averaged data. This discrepancy (64.3 % vs. 80.3 %) may be attributable to the individually estimated values for k(0,4) derived from the tracer data. In some individuals, this parameter was close to zero. When this happened, U(4) [and in some cases U(3)] resulted in a small negative number to satisfy the mass balance requirement. For these subjects, U(4) was set to zero. Furthermore, k(0,4) values close to zero could result from measurement variability or from individuals exhibiting slow clearance of tracer DHA, so that a loss from the DHA compartment [k(0,4)] is difficult to estimate.

DISCUSSION

Using compartmental modeling, we found that nearly 7 % of daily ALA consumption was incorporated into plasma phospholipids. Approximately 99.8 % of ALA from this pool was subsequently converted to EPA, whereas only 1 % of the EPA plasma phospholipid pool was converted to DPA. Essentially all DPA was used for synthesis of DHA. Usually, the limiting step within the n-3 cascade is considered to be the Δ-6 desaturation that is necessary for the conversion of ALA to C18:4n-3 [28-31]. However, our study suggests that this is not the limiting step, as nearly all EPA in the plasma phospholipid pool was derived from the ALA plasma phospholipid pool. Thus, entry into the hepatic phospholipid pool is a limiting factor for ALA conversion to DHA.

Only a few studies have used stable isotopes to quantitatively study ALA metabolism in adults [12-16, 32, 33]. From there pioneering studies, Emken, Adlof, and Gulley [15] estimated that conversion of ALA to its LCPUFAs was 18.5 % on a diet rich in saturated fatty acids and 11 % on a polyunsaturated-rich diet. We estimated that only ~ 7 % of dietary ALA was converted to its LCPUFAs.

The higher n-3 conversion values observed by Emken, Adlof, and Gulley may have been attributable to the use of AUCs [15]. Indeed, Demmelmair et al. have shown that AUC-derived calculations, compared with compartmental modeling, resulted in two times and four to five times higher estimates for the conversion of LA into dihomo-γ-linolenic acid and arachidonic acid, respectively [34]. Compared with AUC values, compartmental modeling is considered to be more accurate, as it accounts for appearance and disappearance rates of ALA and its various metabolites.

For our modeling framework, we chose plasma phospholipid fatty acid compositions to reflect hepatic conversions. Plasma triacylglycerol (TG), which contains even more ALA than phospholipids, could also have been an option. Data from the stable isotope studies of Burdge and colleagues, however, showed that only trace amounts of the labeled elongation products of ALA are incorporated into plasma TG [12, 13]. In the present study, we also analyzed in 78 samples the ^{13}C-labeled n-3 fatty acid enrichments of plasma TG, which were isolated by thin-layer chromatography. Enrichments in the long chain n-3-fatty acids, were too low to be measured reliably.

Except for phospholipids and TG, plasma total lipids also consist of free fatty acids, chylomicrons, and cholesteryl esters (CEs). We believe that neither of these lipid fractions reflect hepatic n-3 conversion reliably. From the studies of Burdge and colleagues [12, 13], it can be estimated that in women only 2.1 % of the total [^{13}C]ALA plasma pool was found in plasma free fatty acids over a period of 21 days. For EPA, DPA, and DHA, these values were 0.3, 0.0, and 1.5 %, respectively [13]. For men, 4.8 % of total plasma [^{13}C]ALA was found in the plasma free fatty acid fraction, whereas other ^{13}C-labeled n-3 fatty acids were not traced at all [12]. Chylomicrons are also not representative for hepatic n-3 fatty acid conversion, as they contain a fraction of [^{13}C]ALA that has not yet been taken up and metabolized by the liver. Thus, if ^{13}C-labeled n-3 LCPUFAs are present in chylomicrons, these fatty acids may be derived from conversion within the enterocyte and not from conversion within the liver. Plasma CEs are formed from cholesterol released from peripheral tissues through the action of LCAT, which transfers a fatty acid from a phospholipid to free cholesterol. CEs are also synthesized in the intestine and liver. If the CE-derived n-3 LCPUFAs originate from plasma phospholipids, the CE pool will not provide new information on hepatic ALA conversion, because these fatty acids are part of the loss parameters, leaving from the various plasma phospholipid compartments. If the CEs are of intestinal origin, the CE-derived ^{13}C-labeled n-3 LCPUFAs, if any, are produced by the enterocyte and therefore do not represent n-3 conversion in liver. Only CEs produced by the liver itself might reflect hepatic ALA conversion, but, as for TG, plasma CEs are rather poor in n-3 LCPUFAs [35]. Therefore, including masses of any other n-3 fatty acid lipid pool in the model would mainly increase the mass of the ALA compartment. Masses of the other compartments would be minimally affected. As a result, the increased mass of the

ALA compartment would be reflected by an increased loss from the ALA compartment rather than by changed fluxes into the other compartments.

Pawlosky et al. were the first to use compartmental modeling to quantify n-3 conversion in adults [16]. In contrast to our results, their findings suggested that only 0.2 % of ALA from plasma total lipids was used for EPA synthesis. Approximately 63 % from the plasma total lipid EPA pool was converted to DPA, and 37 % of DPA was converted to DHA. As already discussed, plasma total lipids may not be the most appropriate lipid fraction for the quantification of hepatic n-3 fatty acid conversion. The discrepancies between our results and those of Pawlosky et al. may further be attributable to other differences in experimental protocols. In our study, tracer intake on the first day (30 mg/d) was ~ 2.7 % of dietary ALA intake, and on the other eight days (20 mg/d) it was 1.8 %. In contrast, Pawlosky et al. gave a single bolus of 1000 mg of deuterated α-linolenate ethyl ester (d5-C18:3n-3), dissolved in a low-fat yogurt, followed by a morning meal and a lunch four hours later. This tracer bolus constituted as much as ~ 89 % of the dietary ALA consumption during the study period. Because isotope intake clearly exceeded trace amounts, perturbation of the kinetic behavior of the ^{12}C-labeled n-3 fatty acids cannot be ruled out [25]. Another difference between our study and that of Pawlosky et al. is the mode of administration of the stable isotopes. As in most other studies, Pawlosky et al. administered the ALA tracer as a single bolus, whereas we provided the tracer in fractionated portions over time. We chose this approach to mimic the longer term supply and metabolism of ALA and to ensure measurable values for DHA. It has already been demonstrated by Vermunt et al. that after administration of a single bolus of [^{13}C]ALA, enrichment of DHA increased only marginally and slowly [33]. Burdge, Jones, and Wootton, also could not detect any significant DHA enrichment over a period of 21 days in plasma phosphatidylcholine, chylomicron TG or nonesterified fatty acids after administration of a single bolus of [^{13}C]ALA [12]. It is further known that, at least for LA, the mode of tracer administration influenced the modeling outcomes [34]. The estimated conversions of LA into dihomo-γ-linolenic acid and of LA to arachidonic acid after a fractionated intake of LA tracer were higher compared with the estimated conversions after a single bolus of the same tracer amount.

One possible limitation of our model is that it mirrored hepatic conversion of dietary ALA. Although it is generally accepted that in humans the liver is the most significant site for n-3 fatty acid conversion, studies with primates suggest that other tissues, such as nervous tissue, are also able to convert ALA [36]. Hence, the total n-3 fatty acid conversion might have been underestimated. However, from the present findings, we can conclude that the limited incorporation of dietary ALA into the phospholipid pool contributes to the low hepatic conversion of dietary ALA into EPA. We further found that the conversion of EPA to DPA, which involves an elongation reaction, might be an additional bottleneck within the hepatic n-3 cascade.

ACKNOWLEDGMENTS

The authors gratefully acknowledge the expert contribution and assistance of prof. David M. Foster (SAAM Institute and University of Washington, Seattle) as well as the assistance of prof. Gianna Toffolo and prof. Claudio Cobelli (University of Padua, Italy) during the initial phase of model development. The authors thank V.T.I.V.T. Ter Hercke (Herk-de-Stad, Belgium), in particular Tony Corthouts and Johny Vanden Dijck, for the production of the experimental pastries.
This work was funded by the Wageningen Centre for Food Sciences, an alliance of major Dutch food industries, Maastricht University, TNO Nutrition and Food Research, and Wageningen University and Research Centre, with financial support from the Dutch government. The model development was partially supported by National Institutes of Health Grant P41 EB-001975, Resource Facility for Population Kinetics.

REFERENCES

1 Voskuil DW, Feskens EJ, Katan MB, Kromhout D. Intake and sources of alpha-linolenic acid in Dutch elderly men. Eur J Clin Nutr 1996; 50:784-7.
2 Ollis TE, Meyer BJ, Howe PR. Australian food sources and intakes of omega-6 and omega-3 polyunsaturated fatty acids. Ann Nutr Metab 1999; 43:346-55.
3 Kris-Etherton PM, Taylor DS, Yu-Poth S, Huth P, Moriarty K, Fishell V, Hargrove RL, Zhao G, Etherton TD. Polyunsaturated fatty acids in the food chain in the United States. Am J Clin Nutr 2000; 71:179S-88S.
4 Innis SM. Essential fatty acid requirements in human nutrition. Can J Physiol Pharmacol 1993; 71:699-706.
5 Bezard J, Blond JP, Bernard A, Clouet P. The metabolism and availability of essential fatty acids in animal and human tissues. Reprod Nutr Dev 1994; 34:539-68.
6 Connor WE. Alpha-linolenic acid in health and disease. Am J Clin Nutr 1999; 69:827-8.
7 Simopoulos AP. Human requirement for N-3 polyunsaturated fatty acids. Poult Sci 2000; 79:961-70.
8 Blank C, Neumann MA, Makrides M, Gibson RA. Optimizing DHA levels in piglets by lowering the linoleic acid to alpha-linolenic acid ratio. J Lipid Res 2002; 43:1537-43.
9 Abedin L, Lien EL, Vingrys AJ, Sinclair AJ. The effects of dietary alpha-linolenic acid compared with docosahexaenoic acid on brain, retina, liver, and heart in the guinea pig. Lipids 1999; 34:475-82.
10 James MJ, Ursin VM, Cleland LG. Metabolism of stearidonic acid in human subjects: comparison with the metabolism of other n-3 fatty acids. Am J Clin Nutr 2003; 77:1140-5.
11 Brenna JT. Use of stable isotopes to study fatty acid and lipoprotein metabolism in man. Prostaglandins Leukot Essent Fatty Acids 1997; 57:467-72.
12 Burdge GC, Jones AE, Wootton SA. Eicosapentaenoic and docosapentaenoic acids are the principal products of alpha-linolenic acid metabolism in young men*. Br J Nutr 2002; 88:355-63.
13 Burdge GC, Wootton SA. Conversion of alpha-linolenic acid to eicosapentaenoic, docosapentaenoic and docosahexaenoic acids in young women. Br J Nutr 2002; 88:411-20.
14 Emken EA, Adlof RO, Duval SM, Nelson GJ. Effect of dietary docosahexaenoic acid on desaturation and uptake in vivo of isotope-labeled oleic, linoleic, and linolenic acids by male subjects. Lipids 1999; 34:785-91.
15 Emken EA, Adlof RO, Gulley RM. Dietary linoleic acid influences desaturation and acylation of deuterium-labeled linoleic and linolenic acids in young adult males. Biochim Biophys Acta 1994; 1213:277-88.

16 Pawlosky RJ, Hibbeln JR, Novotny JA, Salem N, Jr. Physiological compartmental analysis of alpha-linolenic acid metabolism in adult humans. J Lipid Res 2001; 42:1257-65.
17 Stichting Nevo. NEVO tabel, Nederlands voedingsstoffenbestand (Dutch food composition table). Den Haag: Voorlichtingsbureau voor de voeding, 1996.
18 Folch J, Lees M, Sloane-Stanley GH. A simple method for the isolation and purification of total lipides from animal tissues. J Biol Chem 1957; 226:497-509.
19 Kaluzny MA, Duncan LA, Merritt MV, Epps DE. Rapid separation of lipid classes in high yield and purity using bonded phase columns. J Lipid Res 1985; 26:135-40.
20 Lepage G, Roy CC. Direct transesterification of all classes of lipids in a one-step reaction. J Lipid Res 1986; 27:114-20.
21 Al MD, van Houwelingen AC, Kester AD, Hasaart TH, de Jong AE, Hornstra G. Maternal essential fatty acid patterns during normal pregnancy and their relationship to the neonatal essential fatty acid status. Br J Nutr 1995; 74:55-68.
22 Wolfe RR. Radioactive and stable isotope tracers in biomedicine: principles and practice of kinetic analysis. New York, NY: Wiley-Liss, 1992.
23 Cobelli C, Toffolo G, Bier DM, Nosadini R. Models to interpret kinetic data in stable isotope tracer studies. Am J Physiol 1987; 253:E551-64.
24 Barrett PH, Bell BM, Cobelli C, Golde H, Schumitzky A, Vicini P, Foster DM. SAAM II: Simulation, Analysis, and Modeling Software for tracer and pharmacokinetic studies. Metabolism 1998; 47:484-92.
25 Cobelli C, Foster D, Toffolo G. Tracer kinetics in biomedical research: from data to model. New York, N.Y.: Kluwer Academic/Plenum Publishers, 2000.
26 Cobelli C, Caumo A. Using what is accessible to measure that which is not: necessity of model of system. Metabolism 1998; 47:1009-35.
27 Gregersen MI, Rawson RA. Blood volume. Physiol Rev 1959; 39:307-42.
28 Tocher DR, Leaver MJ, Hodgson PA. Recent advances in the biochemistry and molecular biology of fatty acyl desaturases. Prog Lipid Res 1998; 37:73-117.
29 de Antueno RJ, Knickle LC, Smith H, Elliot ML, Allen SJ, Nwaka S, Winther MD. Activity of human Delta5 and Delta6 desaturases on multiple n-3 and n-6 polyunsaturated fatty acids. FEBS Lett 2001; 509:77-80.
30 Song He W, Nara TY, Nakamura MT. Delayed induction of delta-6 and delta-5 desaturases by a peroxisome proliferator. Biochem Biophys Res Commun 2002; 299:832-8.
31 Nakamura MT, Nara TY. Essential fatty acid synthesis and its regulation in mammals. Prostaglandins Leukot Essent Fatty Acids 2003; 68:145-50.
32 Pawlosky RJ, Hibbeln JR, Lin Y, Goodson S, Riggs P, Sebring N, Brown GL, Salem N, Jr. Effects of beef- and fish-based diets on the kinetics of n-3 fatty acid metabolism in human subjects. Am J Clin Nutr 2003; 77:565-72.
33 Vermunt SH, Mensink RP, Simonis MM, Hornstra G. Effects of dietary alpha-linolenic acid on the conversion and oxidation of 13C-alpha-linolenic acid. Lipids 2000; 35:137-42.
34 Demmelmair H, Iser B, Rauh-Pfeiffer A, Koletzko B. Comparison of bolus versus fractionated oral applications of [^{13C}]-linoleic acid in humans. Eur J Clin Invest 1999; 29:603-9.
35 van Houwelingen AC, Kester AD, Kromhout D, Hornstra G. Comparison between habitual intake of polyunsaturated fatty acids and their concentrations in serum lipid fractions. Eur J Clin Nutr 1989; 43:11 20.
36 Su HM, Huang MC, Saad NM, Nathanielsz PW, Brenna JT. Fetal baboons convert 18:3n-3 to 22:6n-3 in vivo. A stable isotope tracer study. J Lipid Res 2001; 42:581-6.

CHAPTER 3

Conversion of α-linolenic acid in humans is influenced by the absolute amounts of α-linolenic acid and linoleic acid in the diet and not by their ratio

Petra L. L. Goyens, Mary E. Spilker, Peter L. Zock, Martijn B. Katan, and Ronald P. Mensink

Based on
American Journal of Clinical Nutrition 2006; 84:44-53.

ABSTRACT

Background

Human *in vivo* data on dietary determinants of α-linolenic acid (ALA; C18:3n 3) metabolism are scarce.

Objective

To examine whether intakes of ALA, linoleic acid (LA; C18:2n-6), or their ratio influence ALA metabolism.

Design

During 4 wk, 29 subjects received a control diet (7 % of energy from LA, 0.4 % of energy from ALA, ALA-to-LA ratio = 1:19). For the next 6 wk, a control diet, a low LA diet (3 % of energy from LA, 0.4 % of energy from ALA, ratio = 1:7) or a high ALA diet (7 % of energy from LA, 1.1 % of energy from ALA, ratio = 1:7) was consumed. Ten days before the end of each dietary period, [U-^{13}C]ALA was administered orally for 9 d. ALA oxidation was determined from breath. Conversion was estimated by using compartmental modeling of ^{13}C- and ^{12}C- n-3 fatty acids concentrations in fasting plasma phospholipids.

Results

Compared with the control group, ALA incorporation into phospholipids increased by 3.6 % in the low LA group ($P = 0.012$) and decreased by 8.0 % in the high ALA group ($P < 0.001$). In absolute amounts, it increased by 34.3 mg ($P = 0.020$) in the low LA group but hardly changed in the high ALA group. Nearly all ALA from the plasma phospholipid pool was converted into eicosapentaenoic acid. Conversion of eicosapentaenoic acid into docosapentaenoic acid and docosahexaenoic acid hardly changed in the 3 groups and was < 0.1 % of dietary ALA. In absolute amounts, it was unchanged in the low LA group, but increased from 0.7 to 1.9 mg ($P = 0.001$) in the high ALA group. ALA oxidation was unchanged by the dietary interventions.

Conclusion

The amounts of ALA and LA in the diet, but not their ratio, determine ALA conversion.

Chapter 3

INTRODUCTION

Eicosapentaenoic acid (EPA; C20:5n-3) and docosahexaenoic acid (DHA; C22:6n-3) play a vital role in many metabolic processes. Although these two fatty acids are readily available from fish, these marine-derived fatty acids can also be synthesized by humans from α-linolenic acid (ALA; C18:3n-3). Humans, however, can obtain ALA only through their diets, because the absence of the required Δ-12 and Δ-15 desaturase enzymes makes *de novo* synthesis from stearic acid impossible. Furthermore, conversion of dietary ALA into EPA is limited. Because the efficacy of n-3 long-chain polyunsaturated fatty acids (LCPUFAs) synthesis decreases down the cascade of ALA conversion, DHA synthesis from ALA is even more restricted than that of EPA [1, 2]. It is generally assumed that linoleic acid (LA; C18:2n 6) reduces EPA synthesis because of the competition between ALA and LA for common desaturation and elongation enzymes [1-4]. Hence, conversion of α-linolenic acid into the n-3 LCPUFAs might be changed by increasing ALA intake or by decreasing LA intake [5-9]. In many of these studies, however, the intakes of both ALA and LA changed, and as a result, so did their ratio. In addition, it has been suggested that the ALA to LA ratio in the diet determines ALA conversion independent of the absolute intakes of both fatty acids [8]. This suggestion does not agree with a recent study in rats [10]. Human studies, however, were not able to disentangle the effect of the ALA to LA ratio on ALA metabolism from the effects of the absolute intake of these 2 fatty acids. The present nutritional intervention trial was designed to determine whether *in vivo* conversion of dietary ALA is influenced by the absolute amounts of LA or ALA in the diet or by the ALA to LA ratio. To that end, we used compartmental modeling to study ALA conversion at various absolute intakes and ratios of LA and ALA in the diet. In addition, effects of the diets on oxidation of uniformly labeled ^{13}C-ALA ([U-^{13}C]ALA) were examined.

SUBJECTS AND METHODS

Subjects

The present study was part of a trial that was designed to examine the effects of PUFAs on cardiovascular disease risk markers. The characteristics of the study population have been previously described in detail [11]. Thirty healthy subjects, fifteen men and fifteen women, completed the study. During study weeks 3 and 4, one male subject had flu with associated gastro-intestinal complaints and weight loss. Therefore, it was decided not to use his data in the analysis of the results. Of the remaining twenty-nine subjects, 2 men and 3 women smoked, 7 women were postmenopausal, and 5 of the

8 premenopausal women used oral contraceptives. The men were on average 53.8 ± 11.6 y old (mean ± SD), weighed 79.6 ± 9.7 kg and had a body mass index (in kg/m^2) of 25.2 ± 3.4. The women were 46.2 ± 14.4 y old, weighed 67.6 ± 8.2 kg, and had a body mass index of 23.5 ± 2.8. The study was approved by the Medical Ethics Committee of Maastricht, and all participants were informed in detail about the purpose and nature of the study before they gave their written informed consent.

Diet and study design

The study consisted of a run-in period of 4 wk that was immediately followed by an experimental period of 6 wk. The study was designed as a double-blind, nutritional intervention trial with 3 parallel arms: a low ratio control group, a high ratio low LA group, and a high ratio high ALA group. For each of these 3 intervention groups, diets were formulated at 9 different energy levels. These energy levels varied from 7.5 MJ to 13.4 MJ, whereas the difference between 2 successive energy levels equaled 0.84 MJ. Before the start of the study, subjects weighed and reported in a 3-d food record all foods and drinks consumed during 1 weekend day and 2 working days. Using the Dutch food composition table [12], we estimated the energy intakes of the subjects' habitual diets. At trial entry, the subjects were allocated to the energy level that matched their estimated energy requirements. Body weights were measured once weekly. The subjects remained on the assigned energy level as long as their body weight did not change by > 2 kg compared with their weight at the start of the study. Otherwise, they were placed into a more appropriate energy level. During the run-in period, all participants consumed a control diet with a nutrient composition that approximated the dietary intake of the Dutch population. This control diet had an ALA to LA ratio of 1:19 by supplying 7 % of energy of LA and 0.4 % of energy of ALA. At the end of the run-in period, the subjects were randomly divided over the 3 experimental groups stratified for gender, age, and total cholesterol concentrations as determined at the screening visit. During the experimental period, one group continued to consume the control diet, whereas the other 2 groups consumed either a low LA or a high ALA diet. As reported previously [11], the diets of the 3 groups were comparable with respect to protein (15 % of energy), carbohydrate (50 % of energy), cholesterol (11.5-13.5 mg/MJ) and fiber (30 - 35 g) intakes. The diets differed, however, with respect to fatty acid composition. The ALA to LA ratio of both the low LA and high ALA diets was about 1:7, which was higher than the ratio of 1:19 of the control diet. On the low LA diet, the ALA to LA ratio was increased by decreasing the proportion of LA from 7 % of energy to 3 % of energy, whereas ALA intake did not change. In contrast, the ALA to LA ratio of the high ALA diet was increased by increasing the intake of ALA from 0.4 % of energy to 1.1 % of energy, whereas LA intake did not change. The modification of the proportions of dietary LA or ALA in the experimental groups was done in exchange for mainly oleic acid and to a small extent saturated fatty acids.

The targeted compositions of the 3 diets were achieved through consumption of nonexperimental and experimental food items which accounted for 10 - 13 % of energy and 22 - 25 % of energy from fat intake respectively. For each of the 9 energy levels, dietary guidelines were provided, describing the type, daily amounts, and preparation of the nonexperimental food items. These guidelines were identical for the 3 intervention groups and had to be followed precisely. In contrast, each intervention group received experimental products that were made from different experimental fats (NIZO food research, Ede, The Netherlands), such as a margarine (NIZO food research) and pastries. The fatty acid composition of the experimental fats has been presented before [11].

Once weekly, the subjects had to visit the department to receive a specific amount of experimental products, such as margarines and pastries (cookies, pies, and cake) in which these margarines were incorporated. The margarines, which contained 84 % absorbable fats and 16 % water, had to be used daily for cooking, baking, or as spread on bread. The pastries were prepared by a local bakery and were consumed daily (cookies) or weekly (pies, cake). The amount of experimental products that the participants received was determined by their assigned energy level. To estimate their energy and nutrient intakes during the study, subjects had to weigh and record their food intake for 2 working days and 1 weekend day in the last week of both the run-in and the intervention periods. The subjects were asked not to change their level of physical exercise, smoking habits, use of alcohol, or use of oral contraceptives during their participation in the study. Consumption of fish or marine foods was prohibited.

Each day, the subjects had to record in diaries any signs of illness, including the date and time of occurrence, duration, date of resolution, and medication used. The subjects were also asked to note their menstrual phase and record in detail any deviations from both the protocol and the amounts of products that had to be consumed. Each week, the diaries were checked in the presence of the subjects by a registered dietician.

Tracer protocol and sampling of blood and breath

An amount of 11.4 g of [U-^{13}C]ALA (isotopic purity of 99 %) was bought from Isotec (Isotec Inc., Miamisburg, Ohio, USA), in 2 batches of 5.7 g each. Each batch was diluted by 27.28 times in olive oil, after which capsules of 0.3 mL were completely filled to obtain 10 mg [U-^{13}C]ALA per capsule.

Ten days before the end of the run-in period and 10 d before the end of the experimental period, on days 19 and 61 respectively, the subjects reported to the department after fasting overnight and abstaining from alcohol for 24 h. The volume of CO_2 expiration (VCO_2) was measured by using a ventilated-hood system (Omnical, Maastricht University, the Netherlands) [13], and breath was sampled to determine the baseline $^{13}C/^{12}C$ ratio of expired CO_2. For the latter measurement, the subjects had to

breath for 3 min through a mouthpiece with 2-way nonrebreathing valves (2700 series; Hans Rudolph Inc., Kansas City, USA), that were connected to a mixing chamber of 6.75 L. From this mixing chamber breath was sampled directly into a 10 mL vacutainer (Becton Dickinson, Meyland, France). Thereafter, a fasting blood sample (t = 0 h) was drawn to measure the background enrichment of ^{13}C-labeled ALA, EPA, docosapentaenoic acid (DPA), and DHA in plasma phospholipids. Subjects then received a single oral bolus of 30 mg [U-^{13}C]ALA that was provided in 3 capsules. Immediately after tracer intake, the subjects had to consume a standardized meal consisting of 200 mL orange juice and 3 slices of bread, each spread with 5 g of the assigned experimental margarine and with 15 g jam. The subjects were allowed to choose between tea and decaffeinated coffee and were free to add milk or sugar. Breath samples were collected at 0.5, 1, 1.5, 2, 2.5, 3, 4, 5, 6, 7, 8, and 9 hours after tracer intake and stored at room temperature for later analysis. VCO_2 production was measured before a breath sample was taken. About 5 after tracer intake, the subjects received a lunch. At day 19 of the run-in period, their meal consisted of bread spread with experimental control margarine as well as experimental and nonexperimental food items according to their choice. The amount and type of the food items had to meet their individual dietary guidelines. All food items and beverages that were consumed on day 19 were weighed and recorded. At day 61 of the experimental period, the subjects were provided with an identical lunch that included the assigned spread and experimental products.

For the 8 d after the tracer oxidation test, the subjects took 20 mg [U-^{13}C]ALA per day: one capsule at 8 a.m. and one at 8 p.m. Tracer capsules for the next days were provided after blood sampling. Fasting blood samples were further collected at 48, 96, 168, 192, and 216 h, which corresponded with days 21, 23, 26, 27 and 28 of the run-in period and days 63, 65, 68, 69 and 70 of the experimental period.

Blood was sampled by venipuncture with a 0.9 x 38 mm needle (PrecisionGlide; Becton Dickinson Vacutainer System, Plymouth, UK) under minimal stasis with the subject in recumbent position. Blood was collected in EDTA-containing tubes, which were kept on ice before and after blood sampling. Plasma was obtained within 1 h after blood sampling by centrifugation of the EDTA-coated tubes for 30 min at 4 °C and 2000 x g. Aliquots from the midportion of plasma were taken and snap frozen in liquid nitrogen. Plasma was stored at -80 °C until analyzed for fatty acid composition and the n-3 fatty acid enrichment of the plasma phospholipids.

Sample analysis

Total lipids were first extracted from plasma by means of a modified procedure of the Folch method with 2-dinonadecanoyl phosphatidylcholine (PC[C19:0]$_2$) as an internal standard [14]. Subsequently, phospholipids were isolated from the total lipid extract on an Extract-Clean NH_2-aminopropylsilyl column (500 mg, 4.0 mL; Alltech Associates

Inc, Deerfield, IL) and where then hydrolyzed and methylated into their corresponding fatty acid methyl esters [15, 16]. The obtained fatty acid methyl esters were then separated and quantified on a gas chromatograph-flame ionization detector (GC/FID, Perkin Elmer Autosystem, Norwalk, Connecticut, USA).

As described earlier in detail [7, 17], the ^{13}C enrichments of the n-3 fatty acid methylesters from plasma phospholipids were analyzed on a gas chromatograph-combustion-isotope ratio mass spectrometer (GC combustion-IRMS, Finnigan MAT 252, Bremen, Germany). The $^{13}C/^{12}C$ ratio of expired CO_2 was determined on a chromatograph-isotope ratio mass spectrometer (GC-IRMS, Finnigan MAT 252) using a coating PoraPLOT Q column (25 m x 0.32 mm, Chrompack International, Varian, California, USA). Helium was used as carrier gas, CO_2 was used as the reference gas, and the injector and column temperature were both 40 °C. All plasma and breath samples from one subject were analyzed in a single run, at the end of the trial.

Quantification of n-3 fatty acid metabolism

The ^{13}C enrichments of the breath samples as well as the plasma phospholipid-derived fatty acid methyl esters were expressed as tracer-to-tracee ratio's (TTRs). The percentage of [U-^{13}C]ALA tracer that was recovered as ^{13}C in expired breath during the first 9 h after tracer intake, was calculated from the TTR in breath and VCO_2 production [7, 18]. The above background concentrations of the tracer and tracee n-3 fatty acids in plasma phospholipids were calculated as described elsewhere [17].

As recently described in detail [17], a compartmental model (**Figure 1**) was derived by using the SAAM II version 1.2 software package (SAAM Institute Inc., Seattle, WA, USA) to quantify the hepatic conversion of n-3 fatty acids. For each individual, this model was applied to the tracer and tracee data from both the run-in and the experimental periods, by using PopKinetics software (SAAM Institute Inc, Seattle, WA, USA) [17]. Briefly, the ^{13}C-labeled n-3 fatty acid data were first incorporated into a compartmental tracer model to estimate transfer rate coefficients [k(i,j) and k(0,j)]. These kinetic parameters were then implemented into a compartmental tracee model (**Figure 1**) to estimate simultaneously with dietary intakes of ALA and unlabeled (or ^{12}C-labeled) n-3 fatty acids, the fractions of dietary ALA incorporated into plasma phospholipids and subsequently converted into EPA, DPA, and DHA. The compartmental models considered the liver as the principal site for n-3 conversion. Furthermore, it was assumed that *de novo* generated n-3 long-chain fatty acids, as well as their dietary precursor ALA, were assembled in plasma phospholipids. Phospholipids were chosen as the modeling framework instead of plasma total lipids, because the latter also consists of lipid fractions that contain only negligible amounts of n-3 LCPUFAS or do not represent hepatic conversion. The tracee n-3 fatty acid concentrations in plasma phospholipids were stable over time at the end of the run-in period and at the end of the

experimental period, as determined by repeated-measures analysis of variance (data not shown). The modeling assumptions, the limitations, and the advantages of the model that was used to estimate the kinetic parameters have already been described and discussed in detail [17].

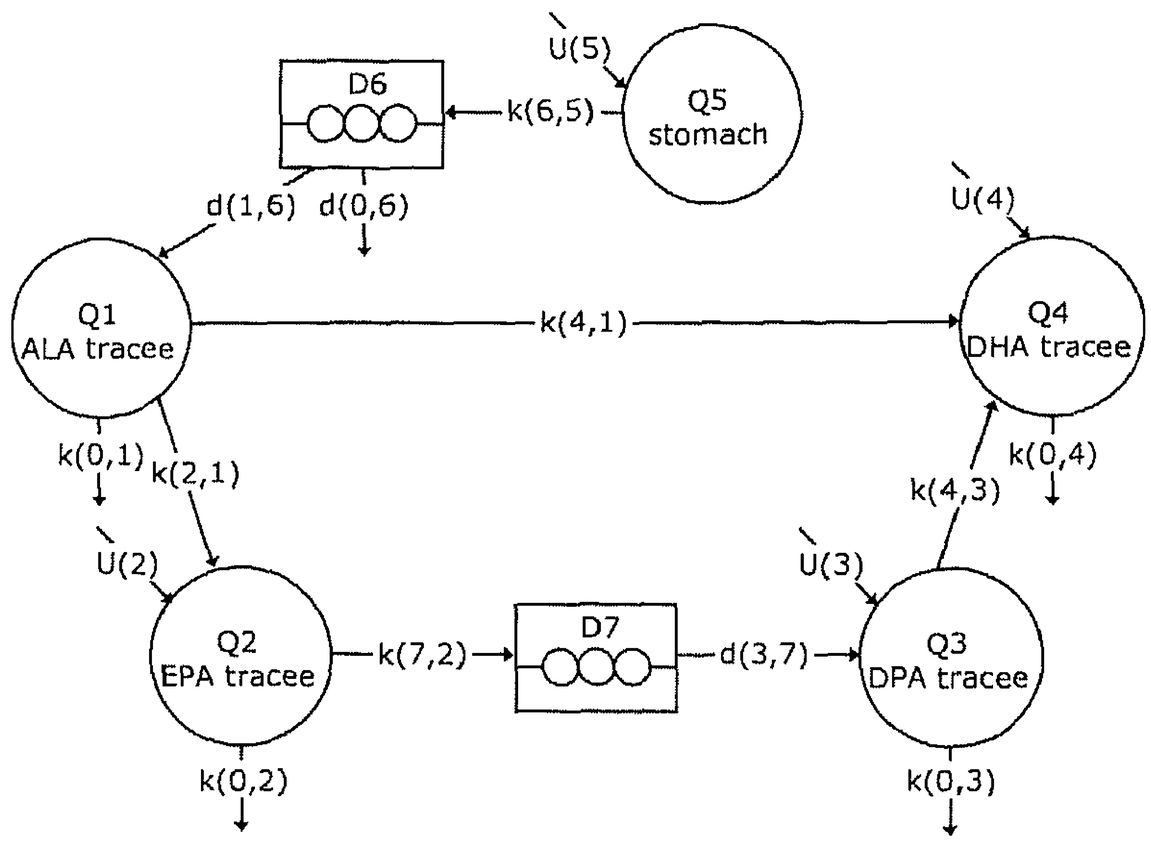

Figure 1

Compartmental tracee model for the conversion of n-3 fatty acids

The circles symbolize the compartments, whereas the rectangular delay boxes represent the delayed passage of n-3 fatty acids between compartments. The first compartment (Q5) represents the stomach, whereas dietary ALA intake is given as U(5). The compartments Q1, Q2, Q3, and Q4 correspond to, respectively, the masses (μmol) of unlabeled α-linolenic acid (ALA), eicosapentaenoic acid (EPA), docosapentaenoic acid (DPA), and docosahexaenoic acid (DHA) in plasma phospholipids. The arrows reflect the flow of fatty acids. The k(i,j) parameters are the transfer rate coefficients, which represents the fraction of fatty acids that is transferred per unit of time (h^{-1}) from compartment j to i. Similarly, k(0,j) equals the fraction of fatty acids that is irreversibly lost per unit of time (h^{-1}) from compartment j. The flux(i,j) denotes the flow of mass per unit of time (μmol/h) from compartment j to i. The flux(i,j) is derived by multiplying the mass of compartment j by the transfer rate coefficient k(i,j). Comparably, the flux(0,j) represents the outflow of mass from compartment j. The parameters U(2), U(3), and U(4) represent the endogenous inflow (μmol/h) of EPA, DPA, and DHA, respectively, from endogenous sources other than plasma phospholipids. Reprinted with permission from reference (17).

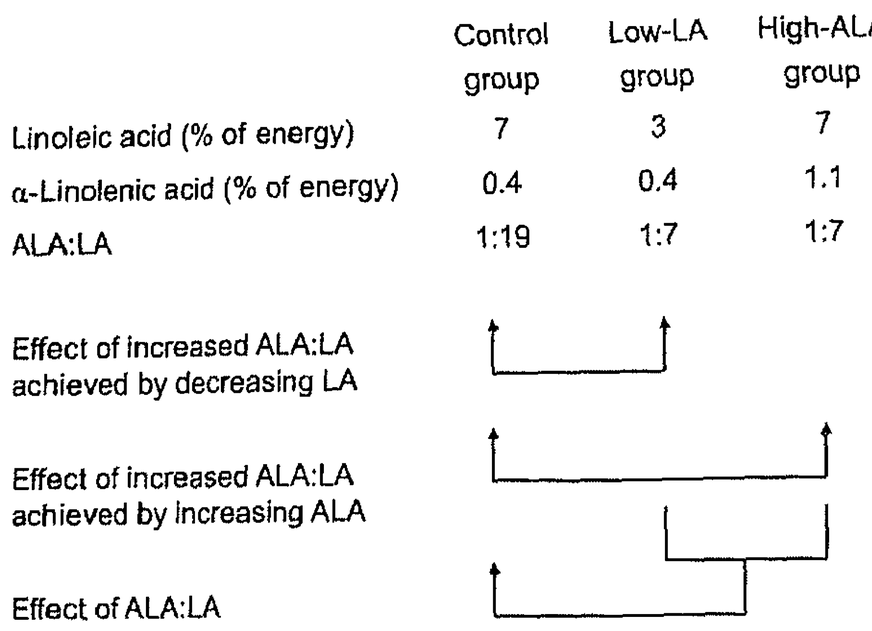

Figure 2
Interpretation of the effects of the absolute amounts of dietary α-linolenic acid (ALA), linoleic acid (LA), and their ratio in the control group, the low LA group, and the high ALA group
The present study was specifically designed to disentangle the effects of the ALA to LA ratio from those of the absolute amounts of ALA and LA in the diet on the metabolism of ALA. The following comparisons can be made: 1) Differences between the low LA group and the control group are due to the decreased intake of LA or the increase in the ALA to LA ratio. 2) Differences between the high ALA group and the control group are due to the increased intake of ALA or the increase in the ALA to LA ratio. 3) If the effects of the low LA group and the high ALA group are the same, and at the same time differ from those in the control group, these effects are due to the increase in the ALA to LA ratio.

Statistical analysis

Results are expressed as mean ± SD. The possible comparisons that can be made between the 3 study groups to disentangle the effects of the absolute amounts of dietary ALA, LA and their ratio on metabolism of ALA are depicted in **Figure 2**. Responses to the experimental diets were calculated for each subject by subtracting the value of a parameter obtained at the end of the run-in period from the value obtained at the end of the experimental period. The effects of the diets were examined with analysis of variance by using the General Linear Models (GLM) procedure in SAS (SAS System release 8.2; SAS Institute Inc., Cary, NC, USA). The response to the experimental diet was defined as the dependent variable and dietary group was a fixed factor.When significant differences were found (P value < 0.05), a Tukey post hoc test was used to make pairwise comparisons of the diets. Although the statistical power may have been too low, additional analyses were performed to see whether dietary effects were modified by gender, use of oral contraceptives, or smoking. For this, analyses were repeated by including the interaction term between diet and these factors into the model.

These interactions terms, however, never reached statistical significance (results not shown).

RESULTS

Body weight and fatty acid composition of plasma phospholipids

Changes in body weight during the experimental period were minor: 0.0 ± 0.6 kg for the control group, -0.4 ± 1.1 kg for the Low LA group, and -0.1 ± 1.0 kg for the high ALA group ($P = 0.612$ for difference in changes between the groups). Compliance with the diets was confirmed by the changes in the fatty acid compositions of plasma phospholipids (**Table 1**). As opposed to the control and the high ALA diets, the proportion of monounsaturated fatty acids (MUFAs) in the low LA diet was increased at the expense of the proportion of LA ($P < 0.001$ vs. control group, $P < 0.001$ vs. high ALA group). Consumption of the low LA and the high ALA diets both raised the proportions of ALA (LA group: $P = 0.001$, ALA group: $P < 0.001$) and EPA (LA group: $P < 0.001$, ALA group: $P < 0.001$) compared with the control diet. DPA was significantly higher after consumption of the high ALA diet than after consumption of the low LA diet ($P = 0.016$). Changes in DHA were not significantly different between the 3 study groups.

Oxidation

During the run-in period, the proportion of tracer that was recovered in breath, 9 h after tracer ingestion, was 19 % for the control group, 18 % for the low LA group and 21 % for the high ALA group (**Table 2**). After the experimental period, changes in tracer recovery were not significantly different between the 3 groups.

Steady state compartmental masses

The steady state compartmental masses (Qi) presented in **Table 3** were obtained by multiplying the tracee n-3 fatty acid concentrations (μmol/L), which were measured in plasma phospholipids, by plasma volume. The latter was assumed to be 4.5 % of body weight [19]. Compared with the control diet, the low LA diet and the high ALA diet both raised the amount of unlabeled ALA and EPA in plasma phospholipids (all $P < 0.01$). The increases in ALA and EPA, however, were not significantly different between these 2 experimental diets. The changes in the masses of unlabeled DPA and DHA did not differ significantly between the 3 study diets

Table 1
Effect of the control diet, the low linoleic acid (LA) diet and the high α-linolenic acid (ALA) diet on the fatty acid composition of plasma phospholipids in healthy humans [1]

	Control group n = 9		Low LA group n = 10		High ALA group n = 10	
	Run-in period	Change [2]	Run-in period	Change [2]	Run-in period	Change [2]
	% of total fatty acids					
Saturated fatty acids	44.7 ± 1.1	0.5 ± 0.4	45.1 ± 1.3	-0.4 ± 1.1	45.1 ± 0.8	-0.4 ± 0.8
Monounsaturated fatty acids	12.7 ± 0.5	0.1 ± 0.6 [a]	13.1 ± 0.8	3.5 ± 0.7 [b]	12.9 ± 0.9	0.1 ± 0.5 [a]
OA: C18:1n-9	8.1 ± 0.6	0.2 ± 0.6 [a]	8.4 ± 0.8	3.1 ± 0.6 [b]	8.1 ± 0.4	-0.2 ± 0.5 [a]
Polyunsaturated fatty acids	41.7 ± 1.1	-0.5 ± 0.7 [a]	41.1 ± 1.2	-3.0 ± 0.9 [b]	41.2 ± 0.6	0.3 ± 0.9 [a]
n-6 Fatty acids	37.1 ± 1.2	-0.3 ± 0.9 [a]	36.6 ± 1.4	-3.4 ± 1.1 [b]	36.2 ± 1.0	0.1 ± 0.9 [a]
LA: C18:2n-6	22.7 ± 1.8	-0.6 ± 1.2 [a]	21.6 ± 2.5	-2.2 ± 1.3 [b]	22.1 ± 2.8	0.3 ± 0.6 [a]
AA: C20:4n-6	9.5 ± 1.4	0.03 ± 0.6	10.0 ± 0.8	-0.96 ± 1.58	9.0 ± 1.96	-0.00 ± 1.08
n-3 Fatty acids	4.5 ± 0.5	-0.19 ± 0.35 [a]	4.3 ± 0.3	0.28 ± 0.21 [b]	4.9 ± 0.9	0.27 ± 0.34 [b]
ALA: C18:3n-3	0.15 ± 0.04	0.01 ± 0.04 [a]	0.15 ± 0.05	0.10 ± 0.04 [b]	0.18 ± 0.05	0.11 ± 0.06 [b]
EPA: C20:5n-3	0.58 ± 0.15	0.02 ± 0.04 [a]	0.55 ± 0.21	0.29 ± 0.12 [b]	0.66 ± 0.21	0.20 ± 0.07 [b]
DPA: C22:5n-3	0.80 ± 0.22	0.03 ± 0.07 [a, b]	0.86 ± 0.23	0.02 ± 0.07 [a]	0.84 ± 0.17	0.12 ± 0.09 [b]
DHA: C22:6n-3	2.9 ± 0.4	-0.25 ± 0.33	2.6 ± 0.3	-0.13 ± 0.13	3.1 ± 0.73	-0.15 ± 0.26
Trans fatty acids	0.84 ± 0.10	-0.11 ± 0.10	0.76 ± 0.20	-0.07 ± 0.13	0.74 ± 0.19	-0.03 ± 0.12

OA, oleic acid; AA, arachidonic acid; EPA, eicosapentaenoic acid; DPA, docosapentaenoic acid; DHA, docosahexaenoic acid.

[1] All values are means ± SD. Values at the end of the run-in period did not differ significantly between the 3 diet groups (ANOVA with the run-in values as the dependent variables and dietary group as a fixed factor). Adapted with permission from Journal of Nutrition (11).

[2] Diet effects were analyzed by ANOVA with the change to the diet as the dependent variable and the dietary group as a fixed factor. Values in a row with different superscript letters are significantly different, $P < 0.05$ (Tukey post-hoc tests for pairwise comparisons).

ive ^{13}C recovery in breath carbon dioxide as a percentage of [U-^{13}C] α-linolenic acid (ALA) ollected over a period of 9 h after tracer intake, for the control group, the low linoleic acid (LA) nd the high ALA group [1]

	Control group n = 9	Low LA group n = 10	High ALA group n = 10
	%		
eriod	19.2 ± 2.4	17.8 ± 5.4	20.7 ± 2.1
ental period	15.7 ± 3.1	15.4 ± 3.4	17.4 ± 3.5
[2]	-3.5 ± 2.6	-2.5 ± 3.9	-3.3 ± 3.3

lues are means ± SD. Values at the end of the run-in period did not differ significantly n the 3 diet groups (ANOVA with the run-in values as the dependent variables and dietary group ed factor).

ffects were analyzed by ANOVA with the change to the diet as the dependent variable and the group as a fixed factor. There were no significant differences in response to the diet.

tate masses of the n-3 fatty acids in plasma phospholipids for the control group, the low linoleic .) group, and the high α-linolenic acid (ALA) group [1]

	Control group n = 9	Low LA group n = 10	High ALA group n = 10
	μmol		
n period	22 ± 8	25 ± 7	31 ± 7
ge [2]	2 ± 2 [a]	14 ± 5 [b]	20 ± 10 [b]
n period	83 ± 29	89 ± 39	104 ± 40
ge [2]	3 ± 8 [a]	42 ± 18 [b]	32 ± 25 [b]
n period	102 ± 37	119 ± 34	119 ± 35
ge [2]	5 ± 7	4 ± 11	14 ± 24
n period	365 ± 62	369 ± 79	455 ± 128
ge [2]	-33 ± 31	-17 ± 23	-52 ± 53

icosapentaenoic acid; DPA, docosapentaenoic acid; DHA, docosahexaenoic acid.

ues are means ± SD. Values at the end of the run-in period did not differ significantly between the groups (ANOVA with the run-in values as the dependent variables and dietary group as a fixed

ffects were analyzed by ANOVA with the change to the diet as the dependent variable and the group as a fixed factor. Values in a row with different superscript letters are significantly nt, $P < 0.05$ (Tukey post- hoc tests for pairwise comparisons).

Rate coefficients, endogenous inputs and fluxes

The effects of the diets on the rate coefficients, endogenous inputs, and fluxes are shown in **Table 4.**

Table 4
Kinetic parameters for the control group, the low linoleic acid (LA) group, and the high α-linolenic acid (ALA) group, estimated by compartmental modeling of ALA conversion [1]

	Control group n = 9	Low LA group n = 10	High ALA group n = 10
Rate constant k(i,j), h^{-1}			
d(ALA, delay) or d(1,6)			
Run-in period [2]	0.07075 ± 0.04 [a]	0.06325 ± 0.02 [a]	0.09699 ± 0.03 [b]
Change	0.01373 ± 0.01 [a]	0.05209 ± 0.03 [b]	-0.06607 ± 0.03 [c]
k(EPA, ALA) or k(2,1)			
Run-in period [2]	0.48701 ± 0.15 [a]	0.42549 ± 0.06 [a]	0.54323 ± 0.08 [b]
Change	0.03445 ± 0.06 [a]	0.03181 ± 0.07 [a]	-0.20462 ± 0.10 [b]
k(DHA, ALA) or k(4,1)			
Run-in period	0.00054 ± 0.00	0.00078 ± 0.00	0.00140 ± 0.00
Change	0.00048 ± 0.00	-0.00042 ± 0.00	-0.00036 ± 0.00
k(delay, EPA) or k(7,2)			
Run-in period [2]	0.00492 ± 0.00 [a]	0.00598 ± 0.00 [a]	0.00436 ± 0.00 [b]
Change	-0.00029 ± 0.00 [a]	-0.00216 ± 0.00 [b]	0.00156 ± 0.00 [c]
k(DHA, DPA) or k(4,3)			
Run-in period	0.00776 ± 0.00	0.00689 ± 0.00	0.00715 ± 0.01
Change	-0.00028 ± 0.00	-0.00032 ± 0.00	-0.00052 ± 0.01
Irreversible loss k(0,j), h^{-1}			
d(loss from delay) or d(0,6)			
Run-in period [2]	0.92925 ± 0.04 [a]	0.93675 ± 0.02 [a]	0.90301 ± 0.03 [b]
Change	-0.01373 ± 0.01 [a]	-0.05209 ± 0.03 [b]	0.06607 ± 0.03 [c]
k(loss from EPA pool) or k(0,2)			
Run-in period [2]	0.49213 ± 0.10 [a]	0.46284 ± 0.13 [a,b]	0.74712 ± 0.32 [c]
Change	0.04088 ± 0.11 [a]	0.06522 ± 0.15 [a]	-0.35337 ± 0.22 [b]
k(loss from DHA pool) or k(0,4)			
Run-in period	0.01786 ± 0.02	0.02042 ± 0.02	0.02736 ± 0.05
Change	-0.00093 ± 0.02	-0.00577 ± 0.01	-0.01458 ± 0.04
Dietary ALA intake or U(5), μmol/h			
Run-in period	160 ± 18	172 ± 17	174 ± 19
Change	1 ± 7 [a]	-10 ± 8 [a]	373 ± 38 [b]
Endogenous input Ui, μmol/h			
U(EPA) or U(2)			
Run-in period [2]	31 ± 13 [a]	28 ± 10 [a]	53 ± 20 [b]
Change	4 ± 9 [a]	20 ± 13 [a]	-20 ± 20 [b]
U(DPA) or U(3)			
Run-in period	0 ± 0	0 ± 0	0 ± 1
Change	0 ± 0	0 ± 0	-0 ± 0
U(DHA) or U(4)			
Run-in period	6 ± 6	7 ± 7	12 ± 24
Change	-1 ± 7	-2 ± 5	-8 ± 23

Table 4 Continued

	Control group n = 9	Low LA group n = 10	High ALA group n = 10
Flux(i,j), µmol/h			
Flux(delay, stomach) or Flux(6,5)			
Run-in period	160.04 ± 17.94	172.42 ± 17.21	173.67 ± 19.22
Change	0.86 ± 6.97 [a]	-10.08 ± 8.10 [a]	372.62 ± 38.12 [b]
Flux(ALA, delay) or Flux(1,6)			
Run-in period [2]	11.16 ± 5.38 [a]	10.79 ± 3.72 [a]	16.65 ± 4.88 [b]
Change	2.09 ± 1.65 [a]	7.23 ± 3.95 [b]	0.29 ± 5.01 [a]
Flux(loss from delay) or Flux(0,6)			
Run-in period	148.88 ± 18.85	161.63 ± 17.75	157.03 ± 19.79
Change	-1.23 ± 7.96 [a]	-17.31 ± 9.98 [a]	372.34 ± 37.11 [b]
Flux(EPA, ALA) or Flux(2,1)			
Run-in period [2]	11.14 ± 5.38 [a]	10.76 ± 3.71 [a]	16.60 ± 4.88 [b]
Change	2.08 ± 1.66 [a]	7.23 ± 3.96 [b]	0.28 ± 4.97 [a]
Flux(DHA, ALA) or Flux(4,1)			
Run-in period	0.01 ± 0.01	0.02 ± 0.01	0.04 ± 0.08
Change	0.01 ± 0.02	-0.01 ± 0.01	0.01 ± 0.09
Flux(loss from EPA) or Flux(0,2)			
Run-in period [2]	41.70 ± 18.43 [a]	38.05 ± 12.58 [a,b]	69.26 ± 22.73 [c]
Change	5.94 ± 10.77 [a]	27.52 ± 15.43 [b]	-19.78 ± 24.69 [c]
Flux(delay, EPA) = Flux (DPA, delay) or Flux(7,2) = Flux(3,7)			
Run-in period	0.40 ± 0.17	0.54 ± 0.26	0.44 ± 0.17
Change	-0.01 ± 0.10 [a]	-0.04 ± 0.20 [a]	0.36 ± 0.23 [b]
Flux(DHA, DPA) or Flux(4,3)			
Run-in period	0.72 ± 0.38	0.77 ± 0.45	0.81 ± 0.62
Change	0.00 ± 0.47	0.01 ± 0.28	0.02 ± 0.61
Flux(loss from DHA) or Flux(0,4)			
Run-in period	6.76 ± 6.18	7.44 ± 7.71	13.29 ± 24.78
Change	-1.08 ± 7.68	-2.26 ± 5.10	-8.34 ± 23.74

EPA, eicosapentaenoic acid; DPA, docosapentaenoic acid; DHA, docosahexaenoic acid.

[1] All values are means ± SD. Variables with no change: k(6,5) = 2, d(3,7) = 1, k(0,1) = 0, k(0,3) = 0, Flux(0,1) = 0, Flux(0,3) = 0. Diet effects were analyzed by ANOVA with the change to the diet as the dependent variable and the dietary group as a fixed factor. Values in a row with different superscript letters are significantly different, $P < 0.05$ (Tukey post-hoc tests for pairwise comparisons).

[2] Differences in run-in values between the 3 groups were analyzed by ANOVA with the value at the end of the run-in period as the dependent variable and dietary group as fixed factor. Values in a row with different superscript letters are significantly different, $P < 0.05$ (Tukey post-hoc tests for pairwise comparisons). Analysis of covariance with the value at the end of the experimental period as the dependent variable, the value at the end of the run-in period as the covariate, and diet as a fixed factor did not change the conclusions with regard to the diet effects.

Effects of diets on rate coefficients

The transfer rate coefficients k(i,j) represent the fraction of substrate that is transferred per unit of time (h^{-1}) from compartment j to i, whereas k(0,j) equals the fraction of substrate per unit of time (h^{-1}) that is irreversibly lost from compartment j (**Figure 1**). The latter represents the outflow of n-3 fatty acids that during the time frame of the tracer experiment does not return to plasma phospholipids. Examples of irreversible losses are the oxidation of a fatty acid and the loss of fatty acids into fat tissue or cell membranes.

Compared with the control diet, the fraction of dietary ALA [d(1,6)] that was incorporated into the plasma phospholipid pool (ALA compartment = Q1) per hour increased after the low LA diet ($P = 0.012$), whereas the fraction of dietary ALA that was not incorporated per hour [d(0,6)] decreased. After consumption of the high ALA diet, however, the fraction of dietary ALA incorporated into ALA plasma phospholipids per hour decreased significantly compared with both the control diet ($P < 0.001$) and the low LA diet ($P < 0.001$). Once incorporated into the plasma phospholipid pool, the fraction of ALA that was converted into EPA per hour [k(2,1)] was significantly lower after consumption of the high ALA diet than after both the control diet ($P < 0.001$) and the low LA diet ($P < 0.001$). Also, the fraction of EPA that entered the delay compartment per hour [k(7,2)] was significantly lower after the low LA diet than after the control diet ($P = 0.005$). In contrast, it was higher after consumption of the high ALA diet than after both the control diet ($P = 0.005$) and the low LA diet ($P < 0.001$). Furthermore, the fraction of EPA that disappeared from the plasma phospholipid pool per hour [k(0,2)] declined significantly after consumption of the high ALA diet ($P < 0.001$ vs. control, $P < 0.001$ vs. low LA). The other rate coefficients were not significantly changed by the experimental diets.

Effects of diets on endogenous inputs

Except for U(5), which represents the intake of dietary ALA, the endogenous input U(i) corresponds with the inflow of tracee fatty acids into compartment i from endogenous sources other than plasma phospholipids. It represents the inflow of n-3 fatty acids into the plasma phospholipids pool that did not originate from dietary ALA consumed during the time frame of the tracer experiment. Examples of endogenous sources include inputs of n-3 fatty acids into plasma phospholipids that were consumed before the tracer experiment and released from adipose tissue, from lipid bilayers, or from lipid fractions other than plasma phospholipids.

Because of the dietary manipulations, dietary intake of ALA [U(5)] was not significantly different between the control and the low LA group, whereas it was about 3 times higher in the high ALA group. The endogenous input into the EPA compartment [U(2)] rose in the high ALA group ($P = 0.006$ vs. control group, $P < 0.001$ vs. low LA group). The inputs into the DPA and DHA compartment did not differ significantly between the experimental groups.

Effects of diets on fluxes

The flux(i,j), which is derived by multiplying the mass of compartment j by the transfer rate coefficient k(i,j), represents the flow of unlabeled fatty acids per unit of time (μmol/h) from compartment j to i. Likewise, the flux(0,j) represents the outflow of unlabeled fatty acids from compartment j.

The flow of dietary ALA which did not enter the plasma phospholipids compartment [flux(0,6)] was significantly higher with the high ALA diet ($P < 0.001$ vs.

control diet, $P < 0.001$ vs. low LA diet). The flow of dietary ALA into the ALA plasma phospholipid compartment [flux(1,6)] and the flow from the ALA into the EPA (flux(2,1)) compartment, were higher after consumption of the low LA diet. The outflow from the EPA compartment [flux(0,2)] was significantly increased in the low LA group ($P = 0.040$ vs. control group), whereas it was significantly decreased in the high ALA group ($P = 0.013$ vs. control group, $P < 0.001$ vs. low LA group). However, in the high ALA group there was a significant rise in the flow from the EPA into the DPA compartment [flux (7,2); $P < 0.001$ vs. control group, $P < 0.001$ vs. low LA group].

The percentage and absolute amounts of ALA incorporation and n-3 fatty acid conversion

During the run-in period, 7.1 %, 6.3 %, and 9.7 % of the dietary ALA intake was incorporated into plasma phospholipids for the control, low LA, and high ALA groups, respectively (**Table 5**). After the low LA diet, the percentage of dietary ALA incorporated into the ALA plasma phospholipid compartment was significantly increased by 4 % compared with the control diet ($P = 0.012$). In contrast, consumption of the high ALA diet significantly decreased the incorporation by 8 % and 12 % compared with the control diet ($P < 0.001$) and the low LA diet ($P < 0.001$), respectively. Expressed in absolute amounts (mg/d), calculated by multiplying the fractional rate constant d(1,6) by the amount of ALA consumed (mg/d), it was found that incorporation of dietary ALA into plasma phospholipids was higher with the low LA diet than with both the control and the high ALA diets ($P = 0.020$ vs. control group, $P = 0.001$ vs. high ALA group). In this respect, no significant differences were found between the control and high ALA groups. During the run-in period, 99.9 % of ALA from the phospholipid pool was converted into EPA in the control group, 99.8 % in the low LA group, and 99.7 % on the high ALA group (data not shown). Thus, 7.1 %, 6.3 %, and 9.7 % of ALA intake was converted into EPA during the run-in period in the control, low LA and high ALA groups, respectively. When compared with the control diet, the change in the percentage of dietary ALA that was converted from ALA into EPA increased significantly after the low LA diet ($P = 0.012$), whereas it decreased after the high ALA diet ($P < 0.001$). This change was also significantly different between the low LA and high ALA diets ($P < 0.001$). The change in the percentage of dietary ALA intake that was converted from EPA via DPA into DHA was not significantly different after consumption of the 3 diets. The absolute amount of EPA in plasma phospholipids that was derived from dietary ALA increased after the low LA diet ($P = 0.019$), whereas it hardly changed after consumption of the high ALA diet. The change in the absolute amount of newly formed DHA did not differ significantly between the control and the low LA diet, whereas it increased significantly after the high ALA diet ($P < 0.001$ vs. control diet, $P < 0.001$ vs. low LA diet).

Table 5
Uptake of dietary α-linolenic acid (ALA) into plasma phospholipids and subsequent conversion into its n-3 fatty acid derivatives expressed in percentages and absolute amounts for the control group, the low linoleic acid (LA) group, and the high α-linolenic acid group [1]

	Control group n = 9	Low LA group n = 10	High ALA group n = 10
Dietary ALA intake (mg/d)			
Run-in period	1069 ± 120	1151 ± 115	1160 ± 128
Change	6 ± 47 [a]	-67 ± 54 [a]	2488 ± 255 [b]
Incorporation into ALA compartment (%)			
Run-in period [2]	7.1 ± 3.6 [a]	6.3 ± 2.3 [a]	9.7 ± 3.1 [b]
Change	1.4 ± 1.2 [a]	5.2 ± 3.4 [b]	-6.6 ± 2.8 [c]
Incorporation into ALA compartment (mg)			
Run-in period [2]	74.5 ± 35.9 [a]	72.0 ± 24.8 [a, b]	111.1 ± 32.6 [c]
Change	13.9 ± 11.0 [a]	48.3 ± 26.4 [b]	1.9 ± 33.4 [a]
Percentage of dietary ALA converted			
ALA → EPA			
Run-in period [2]	7.1 ± 3.6 [a]	6.3 ± 2.3 [a]	9.7 ± 3.1 [b]
Change	1.4 ± 1.2 [a]	5.2 ± 3.4 [b]	-6.6 ± 2.8 [c]
ALA → DHA			
Run-in period	0.01 ± 0.0	0.01 ± 0.0	0.03 ± 0.1
Change	0.01 ± 0.0	-0.00 ± 0.0	-0.02 ± 0.1
ALA → EPA → DPA → DHA			
Run-in period	0.06 ± 0.0	0.09 ± 0.1	0.06 ± 0.0
Change	0.00 ± 0.0	-0.01 ± 0.0	-0.01 ± 0.0
Absolute amount (mg) of dietary ALA converted			
ALA → EPA			
Run-in period [2]	74.4 ± 35.9 [a]	71.9 ± 24.8 [a, b]	110.9 ± 32.6 [c]
Change	13.9 ± 11.1 [a]	48.3 ± 26.4 [b]	1.9 ± 33.2 [a]
ALA → DHA			
Run-in period	0.07 ± 0.0	0.13 ± 0.1	0.28 ± 0.5
Change	0.06 ± 0.1	-0.04 ± 0.1	0.05 ± 0.6
ALA → EPA → DPA → DHA			
Run-in period	0.7 ± 0.3	1.0 ± 0.5	0.7 ± 0.4
Change	0.03 ± 0.2 [a]	-0.1 ± 0.5 [a]	1.2 ± 0.9 [b]

EPA, eicosapentaenoic acid; DPA, docosapentaenoic acid; DHA, docosahexaenoic acid.
[1] All values are means ± SD. Diet effects were analyzed by analysis of variance with the change to the diet as the dependent variable and the dietary group as a fixed factor. Values in a row with different superscript letters are significantly different, $P < 0.05$ (Tukey post-hoc tests for pairwise comparisons).
[2] Differences in run-in values between the three goups were analyzed by analysis of variance with the value at the end of the run-in period as dependent variable and dietary group as fixed factor. Values in a row with different superscript letters are significantly different, $P < 0.05$ (Tukey post-hoc tests for pairwise comparisons). Analysis of covariance with the value at the end of the experimental period as dependent variable, the value at the end of the run-in period as the covariate, and diet as a fixed factor did not change conclusions with regard to the diet effects.

DISCUSSION

In the present study, we showed that conversion of ALA into its longer and more unsaturated fatty acid derivatives is not determined by the ALA to LA ratio but by the amounts of ALA or LA in the diet. Decreasing the intake of LA increased the proportion of dietary ALA that was converted into EPA. On the other hand, increasing ALA intake increased the absolute amount of DHA synthesized.

Several human intervention studies have reported that increasing the intake of ALA or decreasing the intake of LA increased the proportions of ALA and EPA, whereas it does not, or only marginally, changes the proportion of DHA in plasma lipid fractions [8, 20-23]. In agreement with these observations, we found that the low LA and the high ALA diets increased the proportions of ALA and EPA in plasma phospholipids to the same extent, whereas proportions of DHA tended to decrease. The latter finding was also observed by others [23]. However, plasma steady-state fatty acid concentrations are actually a dynamic situation that is characterized by a continuous inflow and outflow of fatty acids, processes that can be quantified by the use of stable isotopes.

Emken et al. were the first to initiate a tracer study to quantify the effects of a change in dietary LA intake on the conversion of ALA [6]. From measurements of enrichment in the total plasma lipid pool, those authors estimated that conversion of ALA into its LCPUFAs in young men was 18.5 % after a saturated fatty acid-rich diet that provided 4.7 % of energy as LA, 0.6 % of energy as ALA, with an ALA to LA ratio of 1:8. Estimates for the conversion of ALA into EPA from other stable isotope studies have varied between 0.2 % and 8 % [4]. We found that conversion following a control diet with a low ALA to LA ratio (7 % of energy as LA, 0.4 % of energy as ALA, ratio 1:19) was on average 7.8 %. As discussed before [4, 17, 24, 25], a part of the variation in outcomes between various studies is due to differences in experimental approaches, such as the analytical method used to quantify ALA metabolism, the type of lipid fraction chosen to reflect hepatic conversion, and the mode of tracer administration. Another part of this variation, however, is due to differences in the fatty acid composition of the diets. Indeed, Emken et al. reported that the conversion of ALA decreased from 18.5 % to 11 %, when LA intake increased from 4.7 % of energy to 9.3 % of energy and ALA intake decreased from 0.6 % of energy to 0.3 % of energy and the ALA to LA ratio changed from 1:8 to 1:31. This 40 % decrease in total n-3 conversion was attributed to the increased intake of LA. However, the simultaneous change in both ALA intake and the ALA to LA ratio could have affected n-3 fatty acid biosynthesis as well. In other stable isotope studies, it was also not possible to disentangle the effects of ALA or LA from those of the ALA to LA ratio [5-9]. We found that a decrease in the LA content of the diet increased the incorporation of dietary ALA into plasma phospholipids from 6.3 % to 11.5 % of ALA intake or from 72 mg to 120 mg. Because almost all ALA from the plasma phospholipids pool was converted into EPA, synthesis of EPA increased to a comparable extent. Thus, our results confirm the general view that a high LA intake inhibits conversion of ALA [2, 3]. In contrast, when the amount of ALA in the diet increased from 0.4 % to 1.1 %, ALA incorporation into plasma phospholipids and the successive EPA synthesis decreased from 9 % to 3 % of ALA intake, whereas no changes were observed when expressed in absolute amounts. Furthermore, the present study confirms that synthesis of DHA in humans is extremely limited. Moreover, our tracer results indicate that conversion from EPA into DPA - a step that appears to be an additional constraint in the n-3 pathway [17] - is

affected differently after a low LA diet than after a high ALA diet. The change in the percentage of dietary ALA that was converted from EPA into DPA and further into DHA was comparable with the control diet, regardless of whether LA intake decreased or ALA intake increased. In contrast, expressed in absolute amounts of ALA intake, the synthesis of DPA and DHA hardly changed in the low LA group, whereas it increased significantly in the high ALA group. Hence, even though EPA synthesis increased after a low LA diet, most of this marine fatty acid was not available for conversion into longer and more unsaturated fatty acids. An increase in ALA intake had just the opposite effect; because more EPA was converted into DPA and DHA.

It has been postulated that a high LA to ALA ratio inhibits conversion of n-3 fatty acids independent of the absolute amounts of these fatty acids in the diet [1, 8]. If this were true, then the metabolic parameters of the low LA and the high ALA diet should have been the same in the present study, because both diets had the same ALA to LA ratio. Clearly, this was not the case. Hence, our findings show that dietary recommendations should not focus on the ALA to LA ratio in the diet, but should consider the individual amounts of dietary ALA and LA. Furthermore, our results support the concept presented by Sinclair et al [2], that a reduction in dietary LA together with an increase in ALA intake would be the most appropriate way to enhance EPA and DHA synthesis from their parent fatty acid ALA. However, it is also clear that this approach will not lead to substantial increases in plasma phospholipid DHA contents as can be obtained through a moderate consumption of fish or marine oils [1]. This agrees with findings in vegetarians and vegans who have lower proportions of plasma EPA and DHA [26].

In line with other studies [1, 2, 5, 6, 9, 27-31], the present study shows that a major part of the ingested ALA is oxidized within 9 h after consumption. β-Oxidation in humans ranges between 16 % and 33 % of the ingested tracer dose, depending on the duration of sampling [31]. Our results fall within these ranges. Our data indicate that the percentage of ALA oxidation over a period of 9 h after tracer intake is not affected by of the absolute amounts of ALA or LA or the ALA to LA ratio of the diet.

In conclusion, the present study shows that the dietary ALA to LA ratio is not a determinant of n-3 fatty acid conversion. An increase in EPA synthesis can be obtained by lowering the amount of LA in the diet, whereas an increase in DHA synthesis is achieved by increasing the amount of dietary ALA. The optimal dietary approach to increase n-3 LCPUFA is to consume them preformed. However, in individuals unwilling or unable to eat seafood, exchanging LA for ALA may be the next best approach.

ACKNOWLEDGMENTS

We gratefully acknowledge the expert contribution and assistance of prof. David M. Foster (SAAM Institute and University of Washington, Seattle), as well as the assistance of prof. Gianna Toffolo and prof. Claudio Cobelli (University of Padua, Italy) during the initial phase of model development. We kindly thank V.T.I.V.T. Ter Hercke (Herk-de-Stad, Belgium), in particular Tony Corthouts and Johny Vanden Dijck, for the production of the experimental pastries. We appreciated the support of the members of our dietary and technical staff and thank all participants for their cooperation and interest.

This work was funded by the Wageningen Centre for Food Sciences, an alliance of major Dutch food industries, Maastricht University, TNO Nutrition and Food Research, and Wageningen University and Research Centre, with financial support from the Dutch government. The model development was partially supported by National Institutes of Health Grant P41 EB-001975, Resource Facility for Population Kinetics.

REFERENCES

1 Brenna JT. Efficiency of conversion of alpha-linolenic acid to long chain n-3 fatty acids in man. Curr Opin Clin Nutr Metab Care 2002; 5:127-32.

2 Sinclair AJ, Attar-Bashi NM, Li D. What is the role of alpha-linolenic acid for mammals? Lipids 2002; 37:1113-23.

3 Gerster H. Can adults adequately convert alpha-linolenic acid (18:3n-3) to eicosapentaenoic acid (20:5n-3) and docosahexaenoic acid (22:6n-3)? Int J Vitam Nutr Res 1998; 68:159-73.

4 Burdge G. Alpha-linolenic acid metabolism in men and women: nutritional and biological implications. Curr Opin Clin Nutr Metab Care 2004; 7:137-44.

5 Burdge GC, Finnegan YE, Minihane AM, Williams CM, Wootton SA. Effect of altered dietary n-3 fatty acid intake upon plasma lipid fatty acid composition, conversion of [^{13}C]alpha-linolenic acid to longer-chain fatty acids and partitioning towards beta-oxidation in older men. Br J Nutr 2003; 90:311-21.

6 Emken EA, Adlof RO, Gulley RM. Dietary linoleic acid influences desaturation and acylation of deuterium-labeled linoleic and linolenic acids in young adult males. Biochim Biophys Acta 1994; 1213:277-88.

7 Vermunt SH, Mensink RP, Simonis MM, Hornstra G. Effects of dietary alpha-linolenic acid on the conversion and oxidation of ^{13}C-alpha-linolenic acid. Lipids 2000; 35:137-42.

8 Hussein N, Ah-Sing E, Wilkinson P, Leach C, Griffin BA, Millward DJ. Long-chain conversion of [^{13}C]linoleic acid and alpha-linolenic acid in response to marked changes in their dietary intake in men. J Lipid Res 2005; 46:269-80.

9 Pawlosky RJ, Hibbeln JR, Lin Y, Goodson S, Riggs P, Sebring N, Brown GL, Salem N, Jr. Effects of beef- and fish-based diets on the kinetics of n-3 fatty acid metabolism in human subjects. Am J Clin Nutr 2003; 77:565-72.

10 Gibson RA. Docosa-hexaenoic acid (DHA) accumulation is regulated by the polyunsaturated fat content of the diet: Is it synthesis or is it incorporation? Asia Pac J Clin Nutr 2004; 13:S78.

11 Goyens PL, Mensink RP. The Dietary {alpha}-Linolenic Acid to Linoleic Acid Ratio Does Not Affect the Serum Lipoprotein Profile in Humans. J Nutr 2005; 135:2799-804.

12 Stichting Nevo. NEVO tabel, Nederlands voedingsstoffenbestand (Dutch food composition table). Den Haag: Voorlichtingsbureau voor de voeding, 1996.

13 Adriaens MP, Schoffelen PF, Westerterp KR. Intra-individual variation of basal metabolic rate and the influence of daily habitual physical activity before testing. Br J Nutr 2003; 90:419-23.
14 Folch J, Lees M, Sloane-Stanley GH. A simple method for the isolation and purification of total lipides from animal tissues. J Biol Chem 1957; 226:497-509.
15 Kaluzny MA, Duncan LA, Merritt MV, Epps DE. Rapid separation of lipid classes in high yield and purity using bonded phase columns. J Lipid Res 1985; 26:135-40.
16 Lepage G, Roy CC. Direct transesterification of all classes of lipids in a one-step reaction. J Lipid Res 1986; 27:114-20.
17 Goyens PL, Spilker ME, Zock PL, Katan MB, Mensink RP. Compartmental modeling to quantify alpha-linolenic acid conversion after longer term intake of multiple tracer boluses. J Lipid Res 2005; 46:1474-83.
18 Vermunt SH, Mensink RP, Simonis MM, Wagenmakers AJ, Hornstra G. The metabolism of linoleic acid in healthy subjects after intake of a single dose of (^{13})C-linoleic acid. Eur J Clin Nutr 2001; 55:321-6.
19 Gregersen MI, Rawson RA. Blood volume. Physiol Rev 1959; 39:307-42.
20 Kelley DS, Nelson GJ, Love JE, Branch LB, Taylor PC, Schmidt PC, Mackey BE, Iacono JM. Dietary alpha-linolenic acid alters tissue fatty acid composition, but not blood lipids, lipoproteins or coagulation status in humans. Lipids 1993; 28:533-7.
21 Mantzioris E, James MJ, Gibson RA, Cleland LG. Dietary substitution with an alpha-linolenic acid-rich vegetable oil increases eicosapentaenoic acid concentrations in tissues. Am J Clin Nutr 1994; 59:1304-9.
22 Valsta LM, Salminen I, Aro A, Mutanen M. Alpha-linolenic acid in rapeseed oil partly compensates for the effect of fish restriction on plasma long chain n-3 fatty acids. Eur J Clin Nutr 1996; 50:229-35.
23 Finnegan YE, Minihane AM, Leigh-Firbank EC, Kew S, Meijer GW, Muggli R, Calder PC, Williams CM. Plant- and marine-derived n-3 polyunsaturated fatty acids have differential effects on fasting and postprandial blood lipid concentrations and on the susceptibility of LDL to oxidative modification in moderately hyperlipidemic subjects. Am J Clin Nutr 2003; 77:783-95.
24 Emken EA. Stable isotope approaches, applications, and issues related to polyunsaturated fatty acid metabolism studies. Lipids 2001; 36:965-73.
25 Burdge GC, Calder PC. Conversion of alpha-linolenic acid to longer-chain polyunsaturated fatty acids in human adults. Reprod Nutr Dev 2005; 45:581-97.
26 Rosell MS, Lloyd-Wright Z, Appleby PN, Sanders TA, Allen NE, Key TJ. Long-chain n-3 polyunsaturated fatty acids in plasma in British meat-eating, vegetarian, and vegan men. Am J Clin Nutr 2005; 82:327-34.
27 Pawlosky RJ, Hibbeln JR, Novotny JA, Salem N, Jr. Physiological compartmental analysis of alpha-linolenic acid metabolism in adult humans. J Lipid Res 2001; 42:1257-65.
28 James MJ, Ursin VM, Cleland LG. Metabolism of stearidonic acid in human subjects: comparison with the metabolism of other n-3 fatty acids. Am J Clin Nutr 2003; 77:1140-5.
29 Burdge GC, Jones AE, Wootton SA. Eicosapentaenoic and docosapentaenoic acids are the principal products of alpha-linolenic acid metabolism in young men*. Br J Nutr 2002; 88:355-63.
30 Burdge GC, Wootton SA. Conversion of alpha-linolenic acid to eicosapentaenoic, docosapentaenoic and docosahexaenoic acids in young women. Br J Nutr 2002; 88:411-20.
31 Burdge GC, Wootton SA. Conversion of alpha-linolenic acid to palmitic, palmitoleic, stearic and oleic acids in men and women. Prostaglandins Leukot Essent Fatty Acids 2003; 69:283-90.

CHAPTER 4

Determinants of dietary α-linolenic acid conversion and oxidation in healthy humans

Petra L. L. Goyens, Mary E. Spilker, Peter L. Zock, Martijn B. Katan, and Ronald P. Mensink

Submitted

ABSTRACT

Background

Human *in vivo* studies exploring determinants of α-linolenic acid (ALA; C18:3n-3) metabolism are scarce.

Objective

To explore whether gender, age, basal metabolic rate, body composition, and the proportion of linoleic acid (LA; C18:2n-6) and *trans* fatty acids in plasma phospholipids are related to ALA conversion and oxidation in healthy humans.

Design

For 28 days, 15 men, 8 premenopausal and 7 postmenopausal women consumed a diet providing 7 percent of energy from LA and 0.4 % from ALA. During the last 9 days, multiple oral boluses of [U-^{13}C]ALA were given; 30 mg on day 19 and 10 mg twice daily for the next eight days. Under steady-state conditions, conversion of dietary ALA was estimated using compartmental modeling of ^{13}C- and ^{12}C-labeled n-3 fatty acid concentrations in fasting plasma phospholipids. Breath was sampled to estimate oxidation of [U-^{13}C]ALA.

Results

The proportion of DHA in plasma phospholipids was significantly higher in premenopausal women than in men ($P = 0.012$). Conversions of ALA into EPA and subsequently into DHA, as well as oxidation of ALA, were similar between men and pre- and postmenopausal women. A positive relation was observed between the conversion of ALA into EPA with age ($P = 0.016$) and percentage of body fat mass ($P = 0.002$). Conversion of EPA into DHA was negatively correlated with the proportion of LA in plasma phospholipids ($P = 0.004$).

Conclusion

Gender and reproductive status were in our study not related to ALA metabolism. Age and percentage fat mass were however positively associated with the conversion of dietary ALA into EPA. LA was negatively associated with the conversion of EPA into DHA.

Chapter 4

INTRODUCTION

Eicosapentaenoic acid (EPA; C20:5n-3) and docosahexaenoic acid (DHA; C22:6n-3), two long-chain polyunsaturated fatty acids (LCPUFAs) of the n-3 family, can be obtained through consumption of fish oil, fish and seafood. Additionally, humans can form these marine fatty acids from α-linolenic acid (ALA; C18:3n-3), the essential parent omega-3 fatty acid from vegetable sources. EPA and DHA are important for human health because of their structural and functional role in cells and cell membranes [1, 2]. Their availability is for example particularly important during fetal development and neonatal growth, when considerable de novo synthesis of tissues occurs and the infant relies heavily on the maternal supply of EPA and DHA [1]. Furthermore, EPA and DHA can have favorable effects on cardiovascular risk [3, 4] and may have a beneficial impact on for example depression, vision, psychiatric disorders and reumatoid arthritis [5-8].

Like any other fatty acid, dietary ALA can be oxidized immediately after intake, stored in tissues, or converted into longer and more unsaturated fatty acids [9-12]. Stable isotope studies [2, 13-16] have now estimated that within 9 to 48 hours, approximately 16 - 33 % of the ingested ALA tracer is oxidized, whereas conversion of ALA into its LCPUFAs is approximately 8 % [14, 17, 18]. Interestingly, women may have lower oxidation rates than men [2, 10, 14], whereas other findings suggest that conversion of ALA is higher in younger women than in men [2, 14, 19].

Recently, we have performed a stable isotope study in healthy humans to estimate the conversion of n-3 fatty acids by means of compartmental modeling [18, 20]. In addition, oxidation of [U-^{13}C]ALA was measured for 9 hours after the first bolus intake. In view of the recent reports on gender specific effects on ALA metabolism [2, 14, 19, 21, 22], the primary aim of the present study was to examine if in our study estimates of ALA conversion and oxidation were related to gender. Secondly, we also studied relationships with age, basal metabolic rate, body composition, and the proportion of linoleic acid (LA; C18:2n-6) and *trans* fatty acids in plasma phospholipids, which may also be related to ALA metabolism [17, 23, 24].

MATERIAL AND METHODS

Subjects

Thirty healthy participants, fifteen men and fifteen women from Maastricht and surrounding areas, completed the study. One male participant was excluded prior to analysis of the results due to gastro-intestinal complaints and related weight loss during

the study. The remaining 29 healthy participants did not use medication and had a stable body weight for at least 3 months preceding the study (< 3 kg weight gain or loss). Seven women were postmenopausal, and five out of the eight premenopausal women used oral contraceptives. Characteristics of the subjects at the end of the four-week run-in period are presented in **Table 1**. The study was approved by the Medical Ethics Committee of Maastricht University and written informed consent was obtained from each participant.

Table 1
Characteristics of the study population [1]

	Men n = 14	Women n = 15	Premenopausal women n = 8	Postmenopausal women n = 7
Age (y)	54 ± 12	46 ± 14	36 ± 12	58 ± 3.2
Length (m)	1.78 ± 0.1	1.70 ± 0.1	1.72 ± 0.1	1.67 ± 0.0
Weight (kg)	79.7 ± 9.4	67.4 ± 8.1	67.2 ± 6.5	67.8 ± 10
Basal metabolic rate (kJ/min)	5.1 ± 0.4	4.1 ± 0.4	4.2 ± 0.2	3.9 ± 0.4
Fat mass (%)	22.2 ± 5.7	31.8 ± 6.5	30.1 ± 7.7	33.8 ± 4.7

[1] Values are means ± SD.

Diet and study design

The diets and the design have been described in detail previously [25]. Briefly, the present tracer study was part of a larger dietary intervention trial that studied effects of polyunsaturated fatty acids on cardiovascular risk markers. For the present analysis, only data from the four-week run-in period were used, during which all subjects received the same control diet. This control diet was formulated at nine different energy levels that ranged between 7.5 MJ and 13.4 MJ, with 0.84 MJ difference between 2 successive levels. Subjects were assigned to one of those energy levels, based on their habitual energy intake that was estimated at the start of the study with a 3-day food record and a Dutch food composition table [26]. Body weight was recorded at each visit and subjects were assigned to another energy intake level, whenever weight differed more than 2 kg from body weight at trial entry.

The control diet was targeted to provide 15 percent of energy (En%) protein, 50 En% carbohydrates, and 35 En% total fat (13 En% saturated fatty acids, 13 En% monounsaturated fatty acids, 7 En% LA, and 0.4 En% ALA). Thus, the diet had an ALA:LA ratio of 1:19 and EPA and DHA intakes were less than 0.1 En% or < 350 mg.

These intakes were achieved through experimental products such as pies, cookies, cake and margarine, that were made from a fat that was especially produced by NIZO food research (Ede, The Netherlands) [25]. Depending on energy intake, the experimental products supplied provided 62 - 71 % of total fat intake or 22 - 25 En% of total energy. On a weekly basis, subjects received a specific amount of experimental products, depending on their assigned energy level. Additionally they were given strict written dietary guidelines with regard to the intake and preparation of other nonexperimental food items. Consumption of fish or seafood was not allowed during the entire study period. Body weight was monitored throughout the trial. Subjects were asked not to change the level of physical exercise, smoking habits, use of alcohol or oral contraceptives during their participation in the study. At the end of the fourth week, subjects had to weigh and record their food intake for two working days and one weekend day to estimate their energy and nutrient intakes [26].

Body composition

On day 28, body composition was determined. First, body weight was measured on a digital scale (Sauter D7470, Ebingen, Germany) and height was measured using a wall-mounted stadiometer (Seca, model 220, Hamburg, Germany). Body density was determined by underwater weighing [27]. Residual lung volume was estimated by helium dilution with a spirometer (Volugraph 2000, Mijnhardt, the Netherlands) at the moment of underwater weighing. Body composition was calculated according to the formula of Siri [28].

Tracer protocol, measurements and blood sampling

Uniformly labeled [^{13}C]ALA free fatty acid tracer ([U-^{13}C]ALA; Isotec Inc., Miamisburg, Ohio, USA) was diluted in olive oil and pipetted into capsules. Each capsule contained 10 mg tracer. Details of the study and methods have already been described extensively [18, 20].

Briefly, on day 19, after 18 days of eating the controlled diet, participants reported to the department after an overnight fast and abstinence from alcohol for 24 hours. Basal metabolic rate (BMR) was measured for 45 minutes using a ventilated-hood system (Omnical, Maastricht University, the Netherlands). Energy expenditure (EE) was calculated from the measured VCO_2 and VO_2 values by means of the Weir equation [29]. Immediately after the BMR measurement, a breath sample and a blood sample were taken (t = 0 h) to measure the baseline $^{13}C/^{12}C$ ratio of expired CO_2 and the baseline enrichment of ^{13}C-labeled ALA, EPA, DPA and DHA in plasma phospholipids respectively. Thereafter, subjects received an oral bolus of 30 mg [U-^{13}C]ALA, provided as 3 capsules and a standardized breakfast.

Subjects received a lunch, approximately 5 hours after tracer intake, which consisted of bread spread with experimental control margarine as well as experimental and non-experimental food items according to their preferences. The amount as well as the type of the food items met the individual's dietary guidelines. Breath samples were collected at 0.5, 1, 1.5, 2, 2.5, 3, 4, 5, 6, 7, 8 and 9 hours after tracer intake and stored at room temperature for later analysis. The VCO_2 production was measured before a breath sample was taken.

For next 8 days, subjects were instructed to take 20 mg [U-^{13}C]ALA daily, one 10 mg-capsule at 8 a.m. and one at 8 p.m. Fasting blood was drawn in precooled EDTA tubes by venipuncture, on days 21 (t = 48 h after the first tracer administration), 23 (t = 96 h), 26 (t = 168 h), 27 (t = 192 h) and 28 (t = 216 h). Plasma was obtained by centrifugation of the EDTA tubes at 2000 x g, and stored at -80 °C until later analysis.

A compartmental model, that was derived using the SAAM II version 1.2 software package (SAAM Institute Inc., Seattle, USA), was used to quantify hepatic conversion of n-3 fatty acids [18]. This model was applied to the tracer and tracee four-week run-in data of each subject using the PopKinetics software (SAAM Institute Inc, Seattle, USA) [18].

Statistical analysis

All variables followed a normal distribution. Results are expressed as mean ± SD. Differences between genders and between pre- and postmenopausal women were examined using unpaired t-tests. A two-tailed value of $P < 0.05$ was considered to be statistically significant. Nonparametric analysis of the effects of gender and reproductive status using Wilcoxon rank sum tests did not change conclusions (results not shown). Univariate and multiple linear regression analyses were performed with parameters of ALA conversion (% conversion of dietary ALA into EPA and to DHA) as dependent variables and subjects' characteristics as independent variables. All analyses were performed using SAS (SAS System release 8.2; SAS Institute Inc., Cary, NC, USA).

RESULTS

Dietary intake and fatty acid composition of plasma phospholipids

The energy and macronutrient consumption of the study population are summarized in **Table 2**. As expected, energy intakes of premenopausal ($P = 0.017$) and postmenopausal women ($P = 0.012$) were lower than those of men.

The macronutrient composition of the diets did not differ significantly between men and women and between pre- and postmenopausal women.

Table 2
Mean daily energy and nutrient intakes of male and female subjects [1]

	Men n = 14	Women n = 15	Premenopausal women n = 8	Postmenopausal women n = 7
Energy (MJ/d)	11.5 ± 1.4	9.9 ± 1.0 [a]	9.9 ± 1.0 [b]	9.8 ± 1.1 [c]
Protein (En%)	14.3 ± 1.7	15.0 ± 1.2	14.9 ± 0.9	15.1 ± 1.6
Carbohydrates (En%)	49.6 ± 4.3	50.7 ± 3.5	51.1 ± 3.8	50.4 ± 3.4
Fat (En%)	33.6 ± 3.1	33.0 ± 3.4	33.6 ± 3.8	32.5 ± 3.1
SAFA (En%)	11.7 ± 1.3	11.1 ± 1.2	11.2 ± 1.3	11.1 ± 1.1
MUFA (En%)	12.9 ± 1.5	12.6 ± 1.5	12.9 ± 1.8	12.4 ± 1.2
PUFA (En%)	7.8 ± 0.6	8.1 ± 0.8	8.3 ± 0.7	7.9 ± 0.7
LA (En%)	7.2 ± 0.5	7.4 ± 0.7	7.6 ± 0.7	7.2 ± 0.7
ALA (En%)	0.4 ± 0.0	0.4 ± 0.0	0.4 ± 0.0	0.4 ± 0.0
ALA to LA ratio	1:19	1:20	1:20	1:19

SAFA, saturated fatty acids; MUFA, monounsaturated fatty acids; PUFA, polyunsaturated fatty acids; LA, linoleic acid; ALA, α-linolenic acid.
[1] Values are means ± SD.
[a] Men vs. all women, $P < 0.05$, unpaired t-test.
[b] Men vs. premenopausal women , $P < 0.05$, unpaired t-test.
[c] Men vs. postmenopausal women , $P < 0.05$, unpaired t-test.

The fatty acid composition profile of plasma phospholipids (**Table 3**) was largely similar for both genders as well as for the pre- and postmenopausal women. However, the proportion of DPA was significantly lower in women than in men ($P = 0.010$). This was due to the lower DPA proportion in plasma phospholipids of premenopausal women ($P = 0.001$ vs. men, $P = 0.009$ vs. postmenopausal women). In contrast, the proportion of DHA was significantly higher in premenopausal women than in men ($P = 0.012$).

Table 3
Fatty acid composition of plasma phospholipids of male and female subjects [1]

	Men n = 14	Women n = 15	Premenopausal women n = 8	Postmenopausal women n = 7
Σ Saturated fatty acids	45.3 ± 1.2	44.7 ± 0.9	44.6 ± 1.0	44.8 ± 0.9
Σ Monounsaturated fatty acids	12.9 ± 1.0	12.9 ± 0.5	12.9 ± 0.4	12.9 ± 0.6
OA: C18:1n-9	8.2 ± 0.8	8.2 ± 0.5	8.2 ± 0.4	8.2 ± 0.6
Σ Polyunsaturated fatty acids	40.9 ± 1.0	41.7 ± 0.9	41.8 ± 1.0	41.5 ± 0.8
Σ n-6 fatty acids	36.3 ± 1.1	36.8 ± 1.3	37.0 ± 1.2	36.7 ± 1.5
LA: C18:2n-6	22.2 ± 2.1	22.0 ± 2.7	21.5 ± 2.8	22.5 ± 2.7
Σ n-3 fatty acids	4.5 ± 0.5	4.7 ± 0.8	4.7 ± 0.6	4.7 ± 1.0
ALA: C18:3n-3	0.15 ± 0.04	0.17 ± 0.05	0.16 ± 0.05	0.19 ± 0.04
EPA: C20:5n-3	0.61 ± 0.20	0.59 ± 0.19	0.52 ± 0.17	0.67 ± 0.19
DPA: C22:5n-3	0.93 ± 0.16	0.75 ± 0.20 [a]	0.63 ± 0.17 [b, c]	0.88 ± 0.13
DHA: C22:6n-3	2.71 ± 0.37	3.07 ± 0.63	3.24 ± 0.53 [b]	2.89 ± 0.72
Σ *trans* fatty acids	0.8 ± 0.2	0.7 ± 0.0	0.7 ± 0.2	0.8 ± 0.2

OA, oleic acid; LA, linoleic acid; ALA, α-linolenic acid; EPA, eicosapentaenoic acid; DPA, docosapentaenoic acid; DHA, docosahexaenoic acid.
[1] Values are means ± SD.
[a] Men vs. all women, $P < 0.05$, unpaired t-test.
[b] Men vs. premenopausal women , $P < 0.05$, unpaired t-test.
[c] Premenopausal vs. postmenopausal women, $P < 0.05$, unpaired t-test.

Oxidation of [U-^{13}C]ALA and conversion of dietary ALA

As can be seen from **Table 4**, the percentage of [U-^{13}C]ALA tracer that was recovered as $^{13}CO_2$ in expired breath as well as the percentage of dietary ALA that is converted into EPA and DHA, were not significantly different between men, pre- and postmenopausal women.

Results of the univariate and multiple linear regression analyses examining the relation between the percentage of synthesized EPA and DHA with subject characteristics are listed in **Table 5**. Univariate regression results showed that conversion of dietary ALA into EPA was positively related to age ($P = 0.016$, $b = 0.107$), percentage of fat mass ($P = 0.002$, $b = 0.228$) and BMI ($P = 0.006$, $b = 0.53$). After multiple regression analysis, age ($P = 0.016$, $b = 0.092$) and percentage of fat mass ($P = 0.002$, $b = 0.208$) remained significant determinants for the conversion of ALA to EPA conversion. The conversion of EPA to DHA was negatively associated with the linoleic acid content of plasma phospholipids ($P = 0.004$) as determined with univariate and multivariate regression.

Table 4
Estimated values for oxidation of [U-^{13}C]ALA and the intake and conversion of dietary ALA in male and female subjects [1]

	Men n = 14	Women n = 15	Premenopausal women n = 8	Postmenopausal women n = 7
Dietary ALA intake (mg/d)	1195 ± 119	1067 ± 95 [a]	1085 ± 48 [b]	1046 ± 131 [c]
ALA oxidation (% of tracer intake)	18.3 ± 4.1	20.1 ± 3.1	20.3 ± 2.6	19.9 ± 3.8
% Dietary ALA incorporation	7.3 ± 2.6	8.1 ± 3.8	7.0 ± 3.9	9.4 ± 3.5
% Conversion of dietary ALA → EPA	7.3 ± 2.6	8.1 ± 3.8	7.0 ± 3.9	9.4 ± 3.5
% Conversion of dietary ALA → DHA total	0.1 ± 0.0	0.1 ± 0.1	0.1 ± 0.1	0.1 ± 0.1
% Conversion of dietary ALA → DHA	0.0 ± 0.0	0.0 ± 0.0	0.0 ± 0.0	0.0 ± 0.0
% Conversion of dietary ALA → EPA→ DPA → DHA	0.1 ± 0.0	0.1 ± 0.0	0.1 ± 0.0	0.1 ± 0.0

ALA, α-linolenic acid; EPA, eicosapentaenoic acid; DPA, docosapentaenoic acid; DHA, docosahexaenoic acid.
[1] Values are means ± SD.
[a] Men vs. all women, $P < 0.05$, unpaired t-test.
[b] Men vs. premenopausal women , $P < 0.05$, unpaired t-test.
[c] Men vs. postmenopausal women , $P < 0.05$, unpaired t-test.

No significant relation was detected with univariate or multiple regression analysis between the subjects' characteristics and the percentage of [U-^{13}C]ALA tracer that was recovered as $^{13}CO_2$ in expired breath (data not shown).

Table 5
Results of regression models for the conversion of ALA into EPA and EPA into DHA

	% Dietary ALA → EPA				% EPA → DHA			
	Estimate	Lower 95 % CI	Upper 95 % CI	P-value	Estimate	Lower 95 % CI	Upper 95 % CI	P-value
Independent variables of the univariate regression models [1]								
Age (y)	0.107	0.022	0.193	0.016	-0.005	-0.020	0.010	0.513
Female	0.870	-1.624	3.364	0.480	-0.082	-0.485	0.322	0.681
Cumulative oxidation (% tracer intake)	-0.003	-0.348	0.343	0.987	-0.043	-0.096	0.010	0.111
Fat mass (%)	0.228	0.090	0.367	0.002	-0.010	-0.036	0.017	0.455
BMI (kg/m^2)	0.530	0.170	0.891	0.006	-0.038	-0.103	0.028	0.246
BMR (kJ/min)	-1.129	-3.051	0.793	0.239	0.043	-0.274	0.360	0.784
LA in plasma PL (% of total fatty acids)	-0.439	-0.949	0.071	0.088	-0.113	-0.187	-0.039	0.004
Σ *trans* fatty acids in plasma PL (% of total fatty acids)	-5.659	-12.902	1.583	0.121	-0.558	-1.757	0.641	0.348
Independent variables of the fitted multiple regression model [2]								
Conversion of % ALA → EPA								
Age (y)	0.092	0.019	0.165	0.016				
Fat mass (%)	0.208	0.081	0.335	0.002				

LA, linoleic acid; ALA, α-linolenic acid; EPA, eicosapentaenoic acid; DHA, docosahexaenoic acid; PL, phospholipids; CI, confidence interval; BMI, body mass index; BMR, basal metabolic rate.
[1] Univariate regression results.
[2] Multivariate regression results.

Chapter 4

DISCUSSION

The primary aim of the present study was to examine if gender was related to n-3 fatty acid metabolism in healthy humans. In addition, associations with age, BMR, BMI, percentage fat mass, and the proportions of linoleic and *trans* fatty acids in plasma phospholipids were studied. We found that n-3 fatty acid conversion and ALA oxidation did not differ between men, premenopausal and postmenopausal women. Conversion of dietary ALA into EPA however increased with age and percentage fat mass, while conversion of EPA into DHA was negatively related to the percentage of LA in plasma phospholipids.

Associations with gender

Data from recent studies [2, 14, 19, 21, 22] have suggested that conversion of ALA into its LCPUFAs is higher in women of reproductive age than in men of the same age group. From a tracer study with six young women, Burdge et al. have estimated that conversions of ALA into EPA and DHA were 21 % and 9 % respectively, as quantified from total plasma lipids using the area under the ^{13}C-labeled n-3 fatty acid concentration time curves [2]. For the six men, these values were 9 % and 0 % [14]. Giltay et al. observed significantly higher proportions of DHA in plasma cholesteryl esters of women than of men, independent of dietary differences [19]. In addition, female subjects taking oral contraceptives had 10 % higher DHA levels than females that were not taking oral contraceptives. Finally, they found that DHA levels of plasma cholesteryl esters increased in male-to-female transsexual subjects that received oral ethinyl estradiol, but not transdermal 17 b-estradiol. In contrast, DHA levels decreased in testosteron treated female-to-male transsexual subjects. The authors concluded that the higher DHA levels may have been caused by an increased DHA synthesis from ALA due to the action of estrogen. Burdge et al. also hypothesized that estrogen up regulates DHA synthesis from ALA [2, 10, 30]. In a stable isotope study in young females, they observed a higher excursion of ^{13}C-labeled DHA in plasma phosphatidiylcholine in women taking oral contraceptives compared to those not taking oral contraceptives [2]. Pawlosky et al. [21] also reported that the four women in the study synthesized more DHA from ALA than the four men. However, effects were dependent on the composition of the background diet, since only significant gender differences were observed when subjects consumed a beef-based diet. In contrast, conversion of DPA into DHA only tended to be larger in women than in men after the ad libitum diet and was similar after the fish-based diet. In the present study, we did not observe that the conversion of ALA into EPA and DHA was significantly related to gender or reproductive status. The diet consumed in the present study was, with respect to LA and ALA intake, very comparable to the ad libitum diet from Pawlosky's study [21]. This may explain why we did not observe gender differences.

Burdge et al. [14] even reported that ^{13}C-labeled DHA was not detectable in plasma lipids from men. In our study, however, all men could convert ALA into DHA. If it is indeed true that male subjects do not or hardly synthesize DHA, this would imply that vegetarian men who do not eat fish and vegan men would be prone to develop deficits in their DHA levels. However, findings from a study by Rosell et al. in 196 British meat-eating, 231 non-fish consuming vegetarian and 232 vegan men, indicate that this does not seem to be the case [31]. In this study it was however found that plasma EPA and DHA proportions were lower in vegetarian and vegan men than in meat-eating men. The duration of adherence to the vegetarian and vegan diet was not related to the proportions of plasma EPA and DHA. It was therefore concluded that, when animal foods are excluded from the diet, the endogenous production of these marine fatty acids results in low but stable plasma EPA and DHA levels [31]. Nevertheless, it is notable that in our study the percentage of DHA in plasma phospholipids at the end of the 4 week run-in period was significantly higher in premenopausal women than in men, despite the fact that the conversion of dietary ALA into DHA was similar. It should be realized, however, that the n-3 fatty acids profiles of plasma phospholipids were steady state values, reached after consuming the run-in diet for 4 weeks. It is possible that under non steady-state conditions (e.g. a large (bolus) intake of ALA or shortly after the start of oral contraceptive use or hormone therapy), DHA synthesis increases temporarily and then returns to baseline levels. This may explain why we observed higher DHA levels in premenopausal women than in men, but under the steady-state conditions of our study no differences in conversion. It needs to be realized however that under steady-state conditions higher DHA levels are not necessarily explained by higher synthesis rates. Low DHA levels may also be accompanied by high synthesis rates, as long as the inflow of DHA into the plasma phospholipid compartment equals the outflow (which is always the case under steady-state conditions). To conclude, there is evidence that premenopausal women have higher DHA levels than men [2, 14, 19, 21]. The present tracer studies however do not provide a clear mechanism to explain these gender related differences [2, 14, 21].

Associations with other baseline characteristics

So far, the relation between age and ALA metabolism has not been assessed in tracer studies. However, in a cross-sectional study, Sands et al. [23] observed a significant positive relation between age and the level of EPA + DHA in red blood cells (RBC) in a group of 163 individuals (74 men, 83 women) between 20 - 80 y. This association persisted after adjusting for fish intake. The authors speculated that, compared to younger subjects, older individuals might have a slower turnover of n-3 fatty acids in tissues, might consume more ALA, or might convert more ALA into its LCPUFAs [23]. Our results suggest that conversion of dietary ALA into EPA indeed increased with age. We estimated that in middle-aged subjects an increase in age of 10 years was related to an increased conversion of dietary ALA into EPA of approximately 1 %.

In contrast, age was not associated with conversion of ALA into DHA. The latter pathway was negatively related to the percentage of LA in plasma phospholipids. In addition, we found that the percentage of fat mass was positively related to the incorporation of ALA into the plasma phospholipid pool and to its subsequent conversion into EPA. This supports the finding of Sands et al. [23], who reported a positive association between BMI and the proportion of EPA + DHA in RBC. As especially postmenopausal women had a significantly higher fat mass than male subjects, analyses were repeated after adjusting for gender and reproductive status. The results, however, did not change. Finally, it has been suggested that *trans* fatty acids inhibit n-3 fatty acid conversion [24]. The findings from the present study, however, did not confirm this hypothesis.

Associations with ALA oxidation

The majority of the studies examining oxidation of ALA tracer have been performed in male subjects or did not present the results of men and women separately [14-16, 32-34]. In one tracer study however it was found that in young women [2] about 22 % of the ingested ALA-dose was recovered as CO_2 in breath over a period of 24 hours. Using the same protocol, this value was 33 % for young men [14]. It was postulated that this difference might be due to the higher muscle mass content of the men, which in turn could explain the lower availability of the ALA tracer for conversion into its long chain derivates. However, we did not observe a higher oxidation of ALA in men than in women. Furthermore, we did not find a significant inverse relation between the oxidation of ALA and its incorporation and subsequent conversion into EPA and DHA. This contrasts findings by Vermunt et al. [16], who observed a negative correlation between the recovery of $^{13}CO_2$ in breath from the oxidation of [^{13}C]ALA over 12 hours, and the maximal [^{13}C]EPA and [^{13}C]DPA amounts in plasma total lipids. It should be noted that the duration of breath sampling in our study was 9 hours as opposed to 24 hours in the two studies of Burdge et al. [2, 14]. Although we did not find a relationship between gender or reproductive status and ALA oxidation at any of the time points, it is theoretically possible that changes might have been evident after 9 hours.

Conclusion

To summarize, our results do not suggest that under steady-state conditions conversion and oxidation of dietary ALA are related to gender or reproductive status. However, conversion of dietary ALA into EPA was positively related to age and percentage fat mass whereas conversion of EPA into DHA was negatively related to the proportion of LA in plasma phospholipids.

ACKNOWLEDGMENTS

We gratefully acknowledge the expert contribution and assistance of prof. David M. Foster (SAAM Institute and University of Washington, Seattle), as well as the assistance of prof. Gianna Toffolo and prof. Claudio Cobelli (University of Padua, Italy) during the initial phase of model development. We kindly thank V.T.I.V.T. Ter Hercke (Herk-de-Stad, Belgium), in particular Tony Corthouts and Johny Vanden Dijck, for the production of the experimental pastries. We appreciated the support of the members of our dietary and technical staff and thank all participants for their cooperation and interest.

This work was funded by the Wageningen Centre for Food Sciences, an alliance of major Dutch food industries, Maastricht University, TNO Nutrition and Food Research, and Wageningen University and Research Centre, with financial support from the Dutch government. The model development was partially supported by National Institutes of Health Grant P41 EB-001975, Resource Facility for Population Kinetics.

REFERENCES

1 Hornstra G. Essential fatty acids in mothers and their neonates. Am J Clin Nutr 2000; 71:1262S-9S.
2 Burdge GC, Wootton SA. Conversion of alpha-linolenic acid to eicosapentaenoic, docosapentaenoic and docosahexaenoic acids in young women. Br J Nutr 2002; 88:411-20.
3 GISSI-Prevenzione-Investigators. Dietary supplementation with n-3 polyunsaturated fatty acids and vitamin E after myocardial infarction: results of the GISSI-Prevenzione trial. Gruppo Italiano per lo Studio della Sopravvivenza nell'Infarto miocardico. Lancet 1999; 354:447-55.
4 Lemaitre RN, King IB, Mozaffarian D, Kuller LH, Tracy RP, Siscovick DS. n-3 Polyunsaturated fatty acids, fatal ischemic heart disease, and nonfatal myocardial infarction in older adults: the Cardiovascular Health Study. Am J Clin Nutr 2003; 77:319-25.
5 Cleland LG, James MJ, Proudman SM. The role of fish oils in the treatment of rheumatoid arthritis. Drugs 2003; 63:845-53.
6 Tanskanen A, Hibbeln JR, Tuomilehto J, Uutela A, Haukkala A, Viinamaki H, Lehtonen J, Vartiainen E. Fish consumption and depressive symptoms in the general population in Finland. Psychiatr Serv 2001; 52:529-31.
7 Connor WE. Importance of n-3 fatty acids in health and disease. Am J Clin Nutr 2000; 71:171S-5S.
8 Peet M, Stokes C. Omega-3 fatty acids in the treatment of psychiatric disorders. Drugs 2005; 65:1051-9.
9 Brenna JT. Efficiency of conversion of alpha-linolenic acid to long chain n-3 fatty acids in man. Curr Opin Clin Nutr Metab Care 2002; 5:127-32.
10 Burdge G. Alpha-linolenic acid metabolism in men and women: nutritional and biological implications. Curr Opin Clin Nutr Metab Care 2004; 7:137-44.
11 Gerster H. Can adults adequately convert alpha-linolenic acid (18:3n-3) to eicosapentaenoic acid (20:5n-3) and docosahexaenoic acid (22:6n-3)? Int J Vitam Nutr Res 1998; 68:159-73.
12 Sinclair AJ, Attar-Bashi NM, Li D. What is the role of alpha-linolenic acid for mammals? Lipids 2002; 37:1113-23.
13 Burdge GC, Wootton SA. Conversion of alpha-linolenic acid to palmitic, palmitoleic, stearic and oleic acids in men and women. Prostaglandins Leukot Essent Fatty Acids 2003; 69:283-90.
14 Burdge GC, Jones AE, Wootton SA. Eicosapentaenoic and docosapentaenoic acids are the principal products of alpha-linolenic acid metabolism in young men*. Br J Nutr 2002; 88:355-63.

15 Burdge GC, Finnegan YE, Minihane AM, Williams CM, Wootton SA. Effect of altered dietary n-3 fatty acid intake upon plasma lipid fatty acid composition, conversion of [^{13}C]alpha-linolenic acid to longer-chain fatty acids and partitioning towards beta-oxidation in older men. Br J Nutr 2003; 90:311-21.
16 Vermunt SH, Mensink RP, Simonis MM, Hornstra G. Effects of dietary alpha-linolenic acid on the conversion and oxidation of ^{13}C-alpha-linolenic acid. Lipids 2000; 35:137-42.
17 Emken EA, Adlof RO, Gulley RM. Dietary linoleic acid influences desaturation and acylation of deuterium-labeled linoleic and linolenic acids in young adult males. Biochim Biophys Acta 1994; 1213:277-88.
18 Goyens PL, Spilker ME, Zock PL, Katan MB, Mensink RP. Compartmental modeling to quantify alpha-linolenic acid conversion after longer term intake of multiple tracer boluses. J Lipid Res 2005; 46:1474-83.
19 Giltay EJ, Gooren LJ, Toorians AW, Katan MB, Zock PL. Docosahexaenoic acid concentrations are higher in women than in men because of estrogenic effects. Am J Clin Nutr 2004; 80:1167-74.
20 Goyens PL, Spilker ME, Zock PL, Katan MB, Mensink RP. Conversion of a-linolenic acid in humans is influenced by the absolute amounts of a-linolenic acid and linoleic acid in the diet and not by their ratio. Am J Clin Nutr 2006; 84:44-53.
21 Pawlosky R, Hibbeln J, Lin Y, Salem N, Jr. n-3 fatty acid metabolism in women. Br J Nutr 2003; 90:993-4; discussion 994-5.
22 Giltay EJ, Duschek EJ, Katan MB, Zock PL, Neele SJ, Netelenbos JC. Raloxifene and hormone replacement therapy increase arachidonic acid and docosahexaenoic acid levels in postmenopausal women. J Endocrinol 2004; 182:399-408.
23 Sands SA, Reid KJ, Windsor SL, Harris WS. The impact of age, body mass index, and fish intake on the EPA and DHA content of human erythrocytes. Lipids 2005; 40:343-7.
24 Koletzko B. Trans fatty acids may impair biosynthesis of long-chain polyunsaturates and growth in man. Acta Paediatr 1992; 81:302-6.
25 Goyens PL, Mensink RP. The Dietary α-Linolenic Acid to Linoleic Acid Ratio Does Not Affect the Serum Lipoprotein Profile in Humans. J Nutr 2005; 135:2799-804.
26 Stichting Nevo. NEVO tabel, Nederlands voedingsstoffenbestand (Dutch food composition table). Den Haag: Voorlichtingsbureau voor de voeding, 1996.
27 Westerterp KR, Wouters L, van Marken Lichtenbelt WD. The Maastricht protocol for the measurement of body composition and energy expenditure with labeled water. Obes Res 1995; 3 Suppl 1:49-57.
28 Siri WE. The gross composition of the body. Adv Biol Med Phys 1956; 4:239-80.
29 Weir JB. New methods for calculating metabolic rate with special reference to protein metabolism. J Physiol 1949; 109:1-9.
30 Burdge GC, Calder PC. Conversion of alpha-linolenic acid to longer-chain polyunsaturated fatty acids in human adults. Reprod Nutr Dev 2005; 45:581-97.
31 Rosell MS, Lloyd-Wright Z, Appleby PN, Sanders TA, Allen NE, Key TJ. Long-chain n-3 polyunsaturated fatty acids in plasma in British meat-eating, vegetarian, and vegan men. Am J Clin Nutr 2005; 82:327-34.
32 Vermunt SH, Mensink RP, Simonis MM, Wagenmakers AJ, Hornstra G. The metabolism of linoleic acid in healthy subjects after intake of a single dose of (^{13})C-linoleic acid. Eur J Clin Nutr 2001; 55:321-6.
33 Bretillon L, Chardigny JM, Sebedio JL, Noel JP, Scrimgeour CM, Fernie CE, Loreau O, Gachon P, Beaufrere B. Isomerization increases the postprandial oxidation of linoleic acid but not alpha-linolenic acid in men. J Lipid Res 2001; 42:995-7.
34 DeLany JP, Windhauser MM, Champagne CM, Bray GA. Differential oxidation of individual dietary fatty acids in humans. Am J Clin Nutr 2000; 72:905-11.

CHAPTER 5

The dietary α-linolenic acid to linoleic acid ratio does not affect the serum lipoprotein profile in humans

Petra L. L. Goyens, and Ronald P. Mensink

Based on
Journal of Nutrition 2005; 135:2799-2804.

ABSTRACT

α-Linolenic acid (ALA; 18:3n-3) and linoleic acid (LA; 18:2n-6) have comparable effects on serum lipid and lipoprotein concentrations, but their effects on lipoprotein subclass distributions and particle sizes are unknown. It is also not known whether these effects are changed by the ALA:LA ratio in the diet. To address these questions, healthy subjects n = 54 consumed a control diet providing 7 % of energy (En%) as LA and 0.4 En% as ALA during a 4-wk run-in period. For the following 6 wk of intervention, each diet was consumed by 18 subjects: the control diet, a low LA diet (3 En% LA, 0.4 En% ALA), or a high ALA diet (7 En% LA, 1.1 En% ALA). The ALA:LA ratio for the control diet was 1:19 and was 1:7 for the other 2 diets. Compared with the control group, LDL cholesterol decreased significantly in the ALA group (-0.32 mmol/L, P = 0.024), as did total cholesterol, apolipoprotein (apo) B, and the total:HDL cholesterol ratio. None of the dietary interventions affected HDL cholesterol, apo A-1, or triacylglycerol concentrations. The decrease in total VLDL particle concentrations in the low LA group was due mainly to a decrease in medium VLDL (-16 nmol/L, P = 0.018) and in the high ALA group to a decrease in small VLDL (-14 nmol/L, P = 0.044). We conclude that the ALA:LA ratio does not affect the serum lipoprotein profile. Compared with the control and LA diets, ALA lowered LDL cholesterol concentrations, possibly caused by the decrease in small VLDL.

INTRODUCTION

A mixture of eicosapentaenoic acid (EPA; 20:5n-3) and docosahexaenoic acid (DHA; 22:6n-3), 2 fish-oil derived members of the n-3 fatty acid family, decreases serum triacylglycerol (TG) concentrations [1]. At the same time, LDL cholesterol concentrations may increase slightly, especially in hypertriacylglycerolemic subjects [2]. On the other hand, lipoprotein particle distributions might be favorably affected [3]. These effects are not shared by α-linolenic acid (ALA; 18:3n-3), an essential fatty acid from the n-3 family and a precursor for EPA and DHA synthesis [4]. In fact, the few intervention studies on the effects of ALA on lipid metabolism indicate that ALA has effects on serum lipid concentrations similar to those of linoleic acid (LA; 18:2n-6), its n-6 fatty acid counterpart [5-7]. In these studies, ALA:LA ratios differed between the diets. Because the metabolism of ALA and LA are interrelated, which is particularly evident in the competition for the same elongation and desaturation enzymes, a change

in this ratio might also affect lipid metabolism, independently of changes in the intake of ALA or LA. The studies conducted to date were not able to disentangle the effects on serum lipid concentrations of the ALA:LA ratio from those of the 2 individual fatty acids. Furthermore, the effects of dietary ALA, LA, and the ALA:LA ratio on lipoprotein particle sizes and subclass distributions have not been investigated together in detail. In only 1 human study, it was reported that walnuts, a source rich in both ALA and LA, decreased cholesterol concentrations preferentially in the small LDL subfractions [8]. The aim of the present study therefore was to compare side-by-side the effects of ALA, LA, and the ALA:LA ratio on fasting serum lipids and apolipoproteins concentrations, and on lipoprotein particle subclasses in humans.

SUBJECTS AND METHODS

Subjects

Subjects were recruited from Maastricht and the surrounding area through posters in public buildings and advertisements in local newspapers. Men and women n = 90, between 18 and 65 y old, applied for enrollment in this controlled dietary intervention study. The purpose and nature of the study, as approved by the Medical Ethics Committee of Maastricht, were fully explained to all applicants. These subjects were invited for 2 screening visits after they had given their written informed consent. Subjects' eligibility was evaluated by means of a medical questionnaire, a urine test to exclude glucosuria, and measurements of serum lipids concentrations in 2 blood samples taken while fasting; there was an interval of at least 3 d between the samples. In addition, after a 10-min rest period, 3 blood pressure measurements were obtained during the first screening visit. When mean diastolic blood pressure of the last 2 measurements was > 85 or systolic > 150 mmHg, blood pressure was measured again during the 2nd screening visit.

Of these 90 subjects, 65 met the following eligibility criteria: BMI < 30 kg/m^2, stable body weight with a maximum change < 3 kg in the past 3 mo; mean serum total cholesterol < 8.0 mmol/L, mean serum TG < 2.5 mmol/L; mean diastolic and systolic blood pressure < 95 mmHg and < 160 mmHg, respectively; no use of medication or prescribed diets known to affect serum lipids; no glucosuria; and no history of coronary heart disease. Ten subjects, 5 men and 5 women, withdrew from the study because of moving to another area n = 2, job commitments n = 1, illness n = 1, or difficulties complying with the strict study protocol n = 6. Before data analysis, results from 1 man were excluded because of gastrointestinal illness during wk 3 and 4 of the study. Of the 54 subjects (21 men and 33 women) that completed the study, 6 women and 4 men smoked, 6 women used oral contraceptives, and 14 women were menopausal.

The 21 men that completed the study were (means ± SD) 52.6 ± 13.7 y old, had a BMI of 24.3 ± 4.4 kg/m^2, a systolic blood pressure of 125 ± 15 mmHg, and a diastolic blood pressure of 78 ± 6 mmHg. The 33 women that completed the study were 47.7 ± 11.1 y old, had a BMI of 23.9 ± 2.7 kg/m^2, a systolic blood pressure of 124 ± 18 mmHg, and a diastolic blood pressure of 78 ± 9 mmHg. For the men, the mean fasting concentrations of serum total cholesterol, LDL cholesterol, HDL cholesterol, and TG at the screening were 5.44 ± 1.11 mmol/L, 3.80 ± 1.03 mmol/L, 1.10 ± 0.23 mmol/L, and 1.16 ± 0.62 mmol/L, respectively. In women, they were 5.42 ± 1.14 mmol/L for total cholesterol, 3.49 ± 1.13 mmol/L for LDL, 1.44 ± 0.47 mmol/L for HDL, and 1.07 ± 0.58 mmol/L for TG.

Design and diets

The study was designed as a randomized, double-blind, parallel intervention study. The total study duration comprised a period of 10 successive weeks: a run-in period of 4 wk followed by an intervention period of 6 wk. During the run-in period, all subjects consumed a control diet, which reflected the mean daily intake of the Dutch population [9]. After the run in period, subjects were randomly allocated to 1 of the 3 possible dietary intervention groups, stratified for gender, age, and total cholesterol concentrations as determined during the screening. The first group (control group, n = 18) continued to consume the control diet. This diet was made up of 7 % of energy (En%) from LA and 0.4 En% from ALA, resulting in an ALA:LA ratio of 1:19. The second (low LA group, n = 18) and the third group (high ALA group, n = 18) followed a diet with a higher ALA:LA ratio of 1:7. Although the ALA:LA ratio was comparable between these 2 groups, the proportions of energy from LA and ALA differed. For the low LA group, LA consumption was decreased to 3 En%, whereas ALA intake was not changed. For the high ALA group, however, ALA intake was increased to 1.1 En%, whereas LA intake was identical to that in the control group.

The 3 study diets, each supplying 15 En% as protein, 50 En% as carbohydrates, and 35 En% as fat, were formulated at 9 levels of energy, ranging from 7.5 to 13.4 MJ. The difference between 2 successive levels was 0.84 MJ. Before the start of the study, subjects were asked to weigh and record their habitual food intakes during 2 working days and 1 weekend day. Energy intake and macronutrient composition of the habitual dietary intake were calculated using the Dutch food composition table [10]. Based on the data of the food records, subjects were assigned to 1 of the 9 energy groups.

For each energy level, dietary guidelines were composed with respect to type, daily amounts, and preparation of nonexperimental food items. Subjects had to follow these guidelines strictly. Consumption of fish and other marine foods was not allowed. The nonexperimental food items supplied 10 - 13 En% as fat, which was equivalent to 29 - 38 % of total fat intake. In addition, experimental products were supplied, which provided 22 - 25 En% as fat.

These products were made from experimental fats (**Table 1**).The control fat consisted of a mixture of 30.4 % sunflower oil, 33.1 % olive oil, 11.5 % rapeseed oil, and 25 % hardstock made from fully hydrogenated palm kernel and palm oil. The experimental fat low in LA was composed of 63 % olive oil, 9 % rapeseed oil, and 28 % hardstock. The fat rich in ALA consisted of 20 % sunflower oil, 5 % olive oil, 52.5 % rapeseed oil, and 22.5 % hardstock. From these fats, a margarine was made containing 84 % absorbable fats and 16 % water. Both the fats and the margarines were made by NIZO food research. Volunteers were required to use the margarines for cooking, baking, and as spread on bread. In addition, a local bakery prepared pastries, such as pies, cookies, and cake from these margarines. Depending on energy intake, subjects had to consume a specific amount of experimental products on a daily (cookies, margarine for cooking and as spread) or weekly (pies and cake) basis. Each volunteer visited the department 1 time/wk to receive a new supply of experimental products.

Subjects had to fill out daily diaries in which they noted in detail any signs of illness, medication used, its date and time of occurrence, duration, and date of resolution. Furthermore, they were asked to record menstrual phase, any deviations from the protocol, and the daily amounts of products used. Each week, diaries were checked in the presence of the subjects by a registered dietician. Subjects were urged not to change the level of physical exercise, smoking habits, alcohol or oral contraceptive use during their participation in the study. Body weight of all participants was measured once a week. Whenever body weight changed by > 2 kg compared with body weight at trial entry, subjects were reassigned to a different energy level. At the end of both the run-in and the intervention periods, subjects had to weigh and record their food intakes for 2 working days and 1 weekend day to estimate energy and nutrient intakes [10].

Blood sampling and analysis

At the end of the run-in period (wk 3 and 4), as well as at the end of the intervention period (wk 9 and 10), blood samples were drawn from fasting subjects to measure concentrations of lipoprotein particles, serum lipids, apolipoprotein (apo) A-I and apoB. To determine the fatty acid composition of plasma phospholipids, a blood sample was taken at the end of wk 4 and 10. Subjects were instructed to abstain from alcohol the day before a blood sampling and not to consume any food at all at least 12 h before sampling. Tea, without sugar or milk, and water, however, were allowed. Venous blood samples were taken from the antecubital vein, under minimal stasis, with the subject in a supine position. Venipunctures were performed under standardized conditions using a 0.9 x 38 mm needle (PrecisionGlide, Becton Dickinson Vacutainer System) by the same technician, at the same location, and usually at the same time and on the same weekday for each subject.

Blood for analysis of serum lipids, apolipoproteins, lipoproteins, and their subclasses was sampled in a 10-mL clotting tube (BD Vacutainer Systems, Becton Dickinson). After blood was allowed to clot for a minimum of 1 h at room temperature, serum was obtained by centrifugation at 2000 x g for 30 min at 4 °C. Serum samples were then stored in small portions at -80 °C until later analysis. For determination of the fatty acid composition of plasma phospholipids, precooled EDTA tubes were used for blood collection. Within 1 h after sampling, blood was centrifuged at 2000 x g for 30 min at 4 °C, and the plasma samples obtained were snap-frozen in liquid nitrogen and stored at -80 °C.

Serum lipids and lipoprotein concentrations were measured separately in the serum samples from wk 3, 4, 9, and 10. Serum total cholesterol and HDL cholesterol, after precipitation of apoB-containing lipoproteins (HDL Cholesterol precipitant, Roche Diagnostics), were analyzed with the CHOD-PAP method (ABX Diagnostics). Serum concentrations of TG, also determined enzymatically, were corrected for free glycerol (GPO Trinder; Sigma Diagnostics). Serum LDL cholesterol concentrations were calculated with the Friedewald equation [11]. The CV within assays was 0.9 % for total cholesterol, 2.4 % for HDL, and 2.3 % for TG.

Serum samples of wk 3 and 4, as well as of wk 9 and 10 were pooled before analysis of apolipoproteins and lipoprotein particles. Serum concentrations of lipoprotein subclasses and lipoprotein particle sizes were measured using NMR spectroscopy (Liposcience) in a randomly chosen subgroup of 29 subjects, 15 women and 14 men [12, 13]. Apo A-1 and apoB concentrations were analyzed in the pooled serum samples of all participants using commercially available kits (ABX DIAGNOSTICS). The CV within assays was 1.9 % for apo A-1 and 2.3 % for apoB. Total lipids were extracted from plasma following a modified Folch procedure [14]. Thereafter, phospholipids were isolated from total lipids using an Extract-Clean NH2-aminopropylsilyl column (500 mg, 4.0 mL; Alltech Associates) and subsequently hydrolyzed and methylated into FAMEs [15, 16]. Separation and quantification of the FAMEs was obtained with GC-flame ionization detection (Perkin Elmer Autosystem), using a CP-Sil 88 capillary column (50 m x 0.25 mm, 0.20-µm film thickness; Chrompack) as described previously [17]. All samples from each subject were analyzed in one single assay at the end of the study.

Statistics

The power to detect a difference in serum LDL cholesterol concentrations of 8 % between 2 treatment groups with an of 0.05 was 80 %. For each subject, serum lipids and lipoprotein values from wk 3 and 4, as well as from wk 9 and 10, were averaged. Results are expressed as means ± SD. Responses to the experimental diets were calculated for each subject by subtracting the value of a variable obtained at the end of the run-in period from the value at the end of the experimental period.

The effects of the diets were examined with ANOVA, using the General Linear Models (GLM) procedure in SAS (SAS System release 8.2; SAS Institute). The response to the experimental diet was defined as the dependent variable and dietary group as a fixed factor. When significant differences were found ($P < 0.05$), a Tukey post hoc test was used to make a pair-wise comparison of the diets.

Table 1
Fatty acid composition of the experimental fats

	Control group	Low LA group	High ALA group
	g/100 g fatty acids		
Saturated fatty acids	29.3	32.6	26.2
Monounsaturated fatty acids	41.0	59.0	41.9
Polyunsaturated fatty acids	29.4	8.2	31.7
LA	27.9	6.8	26.6
ALA	1.3	1.4	4.7
ALA to LA ratio	1:21	1:5.0	1:5.6
Trans fatty acids	0.2	0.11	0.11

LA, linoleic acid; ALA, α-linolenic acid.
Except for the ALA to LA ratio, values are expressed in g/100 g fatty acids.

The experimental fats provided 22 - 25 En% of total energy intake. Mean daily energy and nutrient intakes of the diets are presented in Table 2.

RESULTS

Dietary intake and body weight

Changes in energy intake, the proportions of energy from protein, carbohydrate, and total fat, as well as the amounts of cholesterol and fiber, were negligible and did not differ among the 3 groups. Differences in dietary fatty acid intake were as expected (**Table 2**). Compared with the control group, the intake of LA was reduced in the LA group, due mainly to an exchange for oleic acid (OA) plus some SFA. In the high ALA group, the intake of ALA was slightly increased. These dietary fatty acid changes resulted in an ALA:LA ratio of 1:19 in the control group, and of 1:7 in the 2 experimental groups.

Table 2
Daily energy and nutrient intakes at the end of the 4-wk run-in period when all subjects consumed the control diet and changes after consumption of the control diet, the low LA diet, and the high ALA diet for 6 wk [1]

	Control group			Low LA group			High ALA group		
Energy (MJ/d)									
Run-in period	10.4	±	1.8	10.5	±	1.4	10.9	±	1.2
Experimental period	10.5	±	2.1	10.3	±	2.0	10.8	±	1.3
Change	0.1	±	0.9	-0.2	±	1.0	-0.1	±	1.0
Protein (En%)									
Run-in period	14.7	±	1.6	14.6	±	1.2	15.0	±	1.5
Experimental period	14.5	±	1.4	14.9	±	1.3	15.5	±	1.1
Change	-0.2	±	1.8	0.3	±	1.4	0.5	±	1.7
Carbohydrates (En%)									
Run-in period	50.3	±	3.9	49.7	±	4.0	50.2	±	3.5
Experimental period	50.5	±	3.1	49.8	±	4.1	50.4	±	4.2
Change	0.3	±	3.4	0.1	±	3.5	0.1	±	3.7
Fat (En%)									
Run-in period	33.6	±	2.9	33.5	±	3.2	33.3	±	3.8
Experimental period	33.5	±	2.5	34.0	±	3.9	32.6	±	3.7
Change	-0.1	±	2.8	0.5	±	3.0	-0.7	±	2.4
SAFA (En%)									
Run-in period	11.6	±	1.3	11.4	±	1.3	11.3	±	1.4
Experimental period	11.6	±	1.1	12.4	±	1.8	10.4	±	1.5
Change	-0.0	±	1.3 [a]	1.0	±	1.6 [b]	-1.0	±	1.0 [a]
MUFA (En%)									
Run-in period	12.9	±	1.3	12.8	±	1.4	12.7	±	1.9
Experimental period	12.8	±	1.1	16.9	±	1.9	12.6	±	1.6
Change	-0.1	±	1.1 [a]	4.1	±	1.2 [b]	-0.1	±	1.0 [a]
PUFA (En%)									
Run-in period	7.9	±	0.8	8.2	±	0.6	8.1	±	0.7
Experimental period	8.0	±	0.7	3.7	±	0.4	8.6	±	0.7
Change	0.1	±	0.6 [a]	-4.5	±	0.6 [b]	0.4	±	0.7 [a]
LA (En%)									
Run-in period	7.2	±	0.8	7.5	±	0.6	7.4	±	0.6
Experimental period	7.3	±	0.7	3.0	±	0.3	7.1	±	0.6
Change	0.1	±	0.5 [a]	-4.5	±	0.5 [b]	-0.3	±	0.8 [a]
ALA (En%)									
Run-in period	0.4	±	0.0	0.4	±	0.0	0.4	±	0.0
Experimental period	0.4	±	0.0	0.4	±	0.1	1.1	±	0.1
Change	0.0	±	0.1 [a]	0.0	±	0.0 [a]	0.7	±	0.1 [b]
LA to ALA ratio									
Run-in period	19	±	1	20	±	1	20	±	1
Experimental period	19	±	2	7	±	1	7	±	0
Change	-0	±	2 [a]	-12	±	1 [b]	-13	±	2 [b]
Cholesterol (mg/MJ)									
Run-in period	13.6	±	2.5	11.6	±	2.9	12.6	±	3.9
Experimental period	12.6	±	2.9	11.7	±	4.4	12.1	±	3.1
Change	-0.9	±	3.6	0.1	±	4.5	-0.5	±	4.6
Dietary fiber (g/d)									
Run-in period	30.8	±	4.2	30.6	±	5.5	34.1	±	7.0
Experimental period	29.5	±	5.3	29.1	±	6.8	33.2	±	4.5
Change	-1.3	±	5.6	-1.5	±	3.6	-0.9	±	5.5

SAFA, saturated fatty acids; MUFA, monounsaturated fatty acids; PUFA, polyunsaturated fatty acids; LA, linoleic acid; ALA, α-linolenic acid.
[1] Values are means ± SD, n = 18. Means in a row with superscripts without a common letter differ, $P < 0.05$.

During the experimental period, body weight decreased marginally by -0.1 ± 0.8 kg in the control group, -0.1 ± 1.5 kg in the low LA group, and -0.2 ± 0.8 kg in the high ALA group, changes that did not differ from one another ($P = 0.934$). Dietary compliance was further confirmed by changes in the fatty acid composition of plasma phospholipids (**Table 3**). Compared with the control group, the change in the proportion of monounsaturated fatty acids (MUFA) was increased, whereas that of LA was reduced when subjects consumed the low LA diet. The proportions of MUFA and PUFA remained unchanged after consumption of the high ALA diet. The changes in the proportions of total n-3 fatty acids and of ALA and EPA were greater in the low LA and high ALA groups than in the control group. The proportion of docosapentaenoic acid (DPA) increased, only after consumption of the diet high in ALA. None of the 3 diets affected the proportions of SFA and of DHA in plasma phospholipids. Inspection of the diaries did not reveal any serious deviations from the protocol.

Serum lipids, apolipoproteins, and lipoprotein subclasses

In the high ALA group, serum total cholesterol concentrations were reduced further than in the control group ($P = 0.006$), mainly because of a decrease in LDL cholesterol concentrations ($P = 0.024$) (**Table 4**). Because HDL cholesterol concentrations did not change, the total:HDL cholesterol ratio was also lower in the high ALA group compared with the control group ($P = 0.001$). In agreement with the changes in LDL and HDL cholesterol, apoB concentrations decreased ($P = 0.0116$) in the high ALA group, compared with the control group, whereas apo A-I was not affected. Changes in apoB and apo A-I concentrations did not differ between the low LA and high ALA groups (**Table 5**).

Compared with the control group (**Table 6**), concentrations of total VLDL particles decreased in the low LA group ($P = 0.026$) and in the high ALA group ($P = 0.032$). In the low LA group, the fall in VLDL lipoproteins was due mainly to a decrease in the medium-sized VLDL particles ($P = 0.018$). In the high ALA group, however, small VLDL particles were decreased ($P = 0.044$). Changes in HDL particle size distributions and VLDL, LDL, and HDL mean particle sizes did not differ among the 3 groups (data not shown).

Table 3
Fatty acid composition of plasma phospholipids at the end of the 4-wk run-in period when all subjects consumed the control diet and changes after consumption of the control diet, low LA diet and high ALA diet for 6 wk [1]

	Control group		Low LA group		High ALA group	
	Run-in period	Change	Run-in period	Change	Run-in period	Change
	g/100 g total fatty acids identified					
∑ Saturated fatty acids	45.8 ± 1.5	-0.1 ± 0.9	45.5 ± 1.2	-0.5 ± 0.9	45.7 ± 1.2	-0.5 ± 0.8
∑ Monounsaturated fatty acids	12.9 ± 0.8	0.1 ± 0.8 [a]	12.8 ± 0.8	3.4 ± 0.8 [b]	12.7 ± 0.8	0.2 ± 0.7 [a]
OA: C18:1n-9	8.4 ± 0.9	0.1 ± 0.8 [a]	8.3 ± 0.8	2.9 ± 0.7 [b]	8.1 ± 0.6	-0.2 ± 0.7 [a]
∑ Polyunsaturated fatty acids	40.6 ± 1.6	0.0 ± 1.2 [a]	41.0 ± 1.1	-2.8 ± 0.9 [b]	40.9 ± 0.9	0.2 ± 0.8 [a]
∑ n-6 fatty acids	35.9 ± 1.7	0.2 ± 1.3 [a]	36.5 ± 1.2	-3.1 ± 1.1 [b]	36.2 ± 1.0	-0.2 ± 0.8 [a]
LA: C18:2n-6	21.5 ± 2.0	0.1 ± 1.7 [a]	21.9 ± 2.3	-2.4 ± 1.3 [b]	22.0 ± 2.6	0.1 ± 0.8 [a]
∑ n-3 fatty acids	4.5 ± 0.5	-0.2 ± 0.4 [a]	4.3 ± 0.4	0.2 ± 0.2 [b]	4.6 ± 0.8	0.4 ± 0.3 [b]
ALA: C18:3n-3	0.2 ± 0.1	0.0 ± 0.1 [a]	0.1 ± 0.0	0.1 ± 0.0 [b]	0.2 ± 0.0	0.1 ± 0.0 [b]
EPA: C20:5n-3	0.6 ± 0.2	0.0 ± 0.1 [a]	0.5 ± 0.2	0.2 ± 0.1 [b]	0.6 ± 0.2	0.2 ± 0.1 [b]
DPA: C22:5n-3	0.8 ± 0.2	0.0 ± 0.1 [a]	0.8 ± 0.2	0.0 ± 0.1 [a]	0.8 ± 0.2	0.1 ± 0.1 [a]
DHA: C22:6n-3	2.8 ± 0.5	-0.2 ± 0.3	2.7 ± 0.5	-0.1 ± 0.2	2.9 ± 0.6	-0.1 ± 0.2
∑ *trans* fatty acids	0.7 ± 0.2	-0.0 ± 0.1	0.7 ± 0.2	-0.0 ± 0.2	0.7 ± 0.2	0.0 ± 0.2

OA, oleic acid; LA, linoleic acid; ALA, α-linolenic acid; EPA, eicosapentaenoic acid; DPA, docosapentaenoic acid; DHA, docosahexaenoic acid.
[1] Values are means ± SD, n = 18. Means in a row with superscripts without a common letter differ, $P < 0.05$.

Table 4
Serum lipoprotein concentrations at the end of the 4-wk run-in period when all subjects consumed the control diet, and changes after consumption of the control diet, low LA diet, and high ALA diet for 6 wk [1]

	Total cholesterol			LDL cholesterol			HDL cholesterol			TG			Total: HDL cholesterol ratio		
	mmol/L														
Control group															
Run-in period	5.69	±	1.36	3.83	±	1.20	1.40	±	0.49	1.00	±	0.51	4.44	±	1.73
Experimental period	5.83	±	1.41	3.93	±	1.20	1.39	±	0.52	1.11	±	0.63	4.58	±	1.75
Change	0.14	±	0.30 [a]	0.10	±	0.25 [a]	-0.01	±	0.14	0.11	±	0.23	0.13	±	0.42 [a]
Low LA group															
Run-in period	5.71	±	0.78	3.76	±	0.79	1.50	±	0.36	0.99	±	0.55	4.03	±	1.27
Experimental period	5.73	±	0.69	3.78	±	0.75	1.53	±	0.36	0.90	±	0.39	4.01	±	1.39
Change	0.01	±	0.36 [a, b]	0.03	±	0.29 [a, b]	0.03	±	0.12	-0.09	±	0.31	-0.02	±	0.36 [a, b]
High ALA group															
Run-in period	5.72	±	0.99	3.81	±	0.99	1.38	±	0.46	1.16	±	0.53	4.61	±	1.74
Experimental period	5.46	±	0.99	3.59	±	1.05	1.38	±	0.42	1.07	±	0.38	4.33	±	1.74
Change	-0.26	±	0.44 [b]	-0.22	±	0.48 [b]	0.01	±	0.13	-0.10	±	0.26	-0.29	±	0.45 [b]

[1] Values are means ± SD, n = 18. Means in a column with superscripts without a common letter differ, $P < 0.05$.

Table 5
Apolipoprotein A-I and B concentrations at the end of the 4-wk run-in period when all subjects consumed the control diet, and their changes after consumption of the control diet, low LA diet and high ALA diet for 6 wk [1]

	Apo A-I			ApoB		
	mg/L					
Control group						
Run-in period	1526	±	283	1021	±	290
Experimental period	1590	±	352	1094	±	320
Change	64	±	111	73	±	80 [a]
Low LA group						
Run-in period	1671	±	222	1008	±	220
Experimental period	1671	±	218	1015	±	190
Change	0	±	90	7	±	100 [a, b]
High ALA group						
Run-in period	1498	±	297	1021	±	251
Experimental period	1529	±	352	1003	±	255
Change	31	±	139	-18	±	91 [b]

LA, linoleic acid; ALA, α-linolenic acid.
[1] Values are means ± SD, n = 18.
Means in a column with superscripts without a common letter differ, $P < 0.05$.

Table 6
Lipoprotein subfractions and mean lipoprotein particle size at the end of the 4-wk run-in period when all subjects consumed the control diet and changes after consumption of the control diet, low LA diet, and high ALA diet for 6 wk [1]

	Control group						Low LA group						High ALA group					
	Run-in period			Change			Run-in period			Change			Run-in period			Change		
VLDL Particle Concentrations (nmol/L																		
VLDL Particles (total)	74	±	31	16	±	17 [a]	79	±	31	-9	±	21 [b]	91	±	33	-8	±	20 [b]
Large VLDL/Chylomicrons	2	±	1	1	±	1	4	±	5	0	±	3	3	±	2	-1	±	2
Medium VLDL	26	±	12	7	±	10 [a]	34	±	17	-8	±	11 [b]	34	±	18	-2	±	13 [a, b]
Small VLDL	47	±	23	8	±	9 [a]	41	±	18	0	±	9 [a, b]	53	±	19	-6	±	15 [b]
LDL Particle Concentrations (nmol/L)																		
LDL Particles (total)	974	±	302	89	±	129	1179	±	402	-31	±	157	1241	±	436	20	±	133
IDL	28	±	25	5.6	±	25.4	29	±	37	-1	±	20	44	±	44	-6	±	43
Large LDL	481	±	185	16	±	62	581	±	171	52	±	104	548	±	274	-40	±	141
Small LDL (total)	466	±	286	68	±	157	569	±	448	-82	±	206	649	±	566	66	±	221
Medium Small LDL	89	±	56	14.0	±	31.9	111	±	94	-19	±	48	128	±	114	11	±	50
Very Small LDL	377	±	230	54	±	126	458	±	355	-63	±	160	521	±	452	55	±	173
HDL Particle Concentrations (μmol/L)																		
HDL Particles (total)	33	±	4	2	±	3	36	±	6	1	±	2	35	±	7	1	±	2

[1] Values are means ± SD, n = 9, in control group and n = 10 in the low LA and high ALA groups.
Means in a row with superscripts without a common letter differ, $P < 0.05$.

DISCUSSION

In the present study with normocholesterolemic subjects, we found that a slight increase in the intake of ALA effectively lowered LDL cholesterol. This decrease might be related to the significant decrease in the small VLDL subparticles. It has long been thought that LA lowered serum total and LDL cholesterol concentrations compared with OA [18]. This conclusion was challenged by studies conducted in the late 1980s and 1990s, which demonstrated comparable effects of LA and OA on the serum lipoprotein profile [19, 20]. However, a recent meta-analysis indicated that LA may still lower LDL cholesterol compared with OA, although differences in effects are small [21]. Our results from the control and the low LA groups agree with these findings. When the low LA diet was consumed, the decrease in LA was compensated by an increase in OA and a slight increase in SFA. Based on a recent meta-analysis [21], we calculated that consumption of the low LA diet would decrease LDL cholesterol concentrations by 0.08 mmol/L compared with the control diet. Hence, the study findings concerning total LDL cholesterol concentrations are in line with expectations.

Like LA, ALA is an essential fatty acid. Intakes of ALA are much lower, however, than those of LA. On average, ALA intake varies between 1 and 2 g/d, whereas the mean daily LA intake is 15 g [22, 23]. Several studies with normocholesterolemic subjects suggested that an exchange of ALA for LA does not affect serum lipid concentrations. Pang et al., for example, found no significant effects on the serum lipoprotein profile when LA consumption was decreased from 6.7 En% (21 g/d) to 3.1 En% (12 g/d), and ALA intake was increased simultaneously from 0.1 En% (1 g/d) to 3.5 En% (10 g/d) [6]. Mantzioris et al. also found no change in serum lipid concentrations when a typical Western diet providing 7.8 En% (20.3 g/d) from LA and 0.4 En% (1.1 g/d) from ALA was replaced by a diet that supplied 3.3 En% (8.4 g/d) LA and 5.3 En% (13.7 g/d) ALA [5]. Also, in 2 studies with hyperlipidemic subjects, comparable effects of ALA and LA on serum LDL cholesterol were reported [24, 25]. In our study, we increased the intake of ALA from 0.4 En% (1.1 g/d) to 1.1 En% (3.1 g/d) at the expense of some LA, OA, and SFA. The slight decrease in total fat intake of 0.7 En% was compensated mainly by a slight increase in protein intake. If ALA and LA would indeed have comparable effects on serum LDL cholesterol, then a difference of 0.04 mmol/L between the control and high ALA groups could be expected [21]. In fact, a significant difference of 0.32 mmol/L was observed in favor of the high ALA group. This result does not agree with findings from previous studies [5-7, 26, 27]. The question then arises whether this is a chance finding or whether it can be explained by differences among studies in experimental design.

The metabolisms of ALA and LA are mutually dependent, as shown by the competition for the same elongation and desaturation enzymes [28-30].

In most studies conducted to date, the intakes of LA and ALA, and consequently their ratio, changed at the same time. The present study was therefore specifically designed to disentangle the effects of the ALA:LA ratio on the serum lipid profile from those of the absolute amounts of ALA and LA in the diet. The low LA and high ALA diets had a comparable ALA:LA ratio of 1:7, which was much higher than the ratio of 1:19 of the control diet. Despite similar ALA:LA ratios, serum LDL cholesterol concentrations were significantly lowered only in the high ALA group. This suggests that the ALA:LA ratio itself does not affect serum LDL cholesterol concentrations. The finding that the ALA:LA ratio is not important implies that the increase in dietary ALA should have caused the observed decrease in LDL cholesterol. Yet, the increase in ALA intake was rather small compared with studies that did not demonstrate a difference in the effect on LDL cholesterol between ALA and LA [5, 6, 27]. It can also be argued that the relatively high LA intake, which was 7 En% in the high ALA group, modulated the effects of ALA. However, similar effects of LA and ALA on LDL cholesterol were found independently of LA intake [5-7, 26]. In fact, Valsta et al. explicitly concluded that in the presence of considerable amounts of LA in the diet, ALA affects serum lipoprotein levels similarly to LA [7]. Finally, we speculate that the effects of ALA do depend on the intake of cholesterol, as was postulated for palmitic acid [31]. In the present study, dietary cholesterol was low for all diets and was 12.1 mg/MJ or 132 mg/d in the high ALA diet. In this respect, it is noteworthy that in the studies of Valsta et al. and Zhao et al., cholesterol intake was 2 times higher [7, 25]. Unfortunately, the few other studies that compared the lipidemic effect of ALA and LA did not report the cholesterol levels of their diets [5, 6, 24, 26, 27]. In agreement with other studies, HDL cholesterol and TG concentrations did not change significantly in our study [6, 24, 27].

The effects of dietary n-3 and n-6 fatty acids on lipoprotein particle distributions and lipoprotein particle sizes, which are related to cardiovascular risk [32-34], have scarcely been studied. For the marine PUFAs, it was suggested that fish oil may favorably lower concentrations of small and medium VLDL particles [3]. Only 1 study examined changes in the lipoprotein particle profile of hyperlipidemic subjects after consuming low- and high-fat diets with and without walnuts, rich in ALA but also in LA [8]. It was reported that consumption of the high-fat diet walnut supplementation favorably decreased small LDL cholesterol and large HDL particle concentrations. However, results are difficult to interpret because not only ALA and LA changed after consumption of the walnuts, but also total fat intake, which is also a determinant of lipoprotein particle size and subclass distribution [35, 36]. We observed a comparable decrease in total VLDL particle concentrations in the low LA and high ALA groups, but effects on VLDL subclasses differed. Compared with the control group, the low LA diet decreased medium VLDL subfraction concentrations, whereas the high ALA diet lowered small VLDL subclasses. The latter observation may explain the decrease in LDL cholesterol concentrations in the high ALA group. Small VLDL particles, rather then large VLDL particles, are considered to be the preferred substrate for conversion

into LDL lipoproteins [37, 38]. Hence, a decrease in small VLDL particles may lower LDL synthesis and consequently LDL cholesterol concentrations. The finding that both the low LA and high ALA diets decreased total VLDL particle concentrations was also observed after consumption of fish oil, which is rich in EPA and DHA In the present study, the proportion of EPA in plasma phospholipids was significantly increased with consumption of both experimental diets, whereas DHA was not affected. This raises the question whether EPA might have caused the change in VLDL particle concentrations.

In conclusion, the present study indicates that the ALA:LA ratio is not a determinant of serum lipids and lipoproteins concentrations. Only the diet with a small increase in ALA intake caused a significant decrease in LDL cholesterol and apoB concentrations. This decrease might have been caused by the decrease in small VLDL particles, the precursor to LDL lipoproteins. Effects of ALA on LDL cholesterol contrasted, however, with those of previous reports and warrant further study.

ACKNOWLEDGMENTS

We gratefully acknowledge V.T.I.V.T. Ter Hercke (Herk-de-Stad, Belgium), in particular Tony Corthouts and Johny Vanden Dijck, for the production of the experimental pastries.

REFERENCES

1 Harris WS. n-3 Long-chain polyunsaturated fatty acids reduce risk of coronary heart disease death: extending the evidence to the elderly. Am J Clin Nutr 2003; 77:279-80.
2 Harris WS. Fish oils and plasma lipid and lipoprotein metabolism in humans: a critical review. J Lipid Res 1989; 30:785-807.
3 Li Z, Lamon-Fava S, Otvos J, Lichtenstein AH, Velez-Carrasco W, McNamara JR, Ordovas JM, Schaefer EJ. Fish consumption shifts lipoprotein subfractions to a less atherogenic pattern in humans. J Nutr 2004; 134:1724-8.
4 Harris WS. n-3 fatty acids and serum lipoproteins: human studies. Am J Clin Nutr 1997; 65:1645S-1654S.
5 Mantzioris E, James MJ, Gibson RA, Cleland LG. Dietary substitution with an alpha-linolenic acid-rich vegetable oil increases eicosapentaenoic acid concentrations in tissues. Am J Clin Nutr 1994; 59:1304-9.
6 Pang D, Allman-Farinelli MA, Wong T, Barnes R, Kingham KM. Replacement of linoleic acid with alpha-linolenic acid does not alter blood lipids in normolipidaemic men. Br J Nutr 1998; 80:163-7.
7 Valsta LM, Jauhiainen M, Aro A, Salminen I, Mutanen M. The effects on serum lipoprotein levels of two monounsaturated fat rich diets differing in their linoleic and a-linolenic acid contents. Nutr Metab Cardiovasc Dis 1995; 5:129-140.
8 Almario RU, Vonghavaravat V, Wong R, Kasim-Karakas SE. Effects of walnut consumption on plasma fatty acids and lipoproteins in combined hyperlipidemia. Am J Clin Nutr 2001; 74:72-9.
9 Zo eet Nederland. (1998) Resultaten van dc voedselconsumptiepeiling 1998. Den Haag: Voedingscentrum.

10 Stichting Nevo. NEVO tabel, Nederlands voedingsstoffenbestand (Dutch food composition table). Den Haag: Voorlichtingsbureau voor de voeding, 1996.
11 Friedewald WT, Levy RI, Fredrickson DS. Estimation of the concentration of low-density lipoprotein cholesterol in plasma, without use of the preparative ultracentrifuge. Clin Chem 1972; 18:499-502.
12 Freedman DS, Otvos JD, Jeyarajah EJ, Shalaurova I, Cupples LA, Parise H, D'Agostino RB, Wilson PW, Schaefer EJ. Sex and age differences in lipoprotein subclasses measured by nuclear magnetic resonance spectroscopy: the Framingham Study. Clin Chem 2004; 50:1189-200.
13 Festa A, Williams K, Hanley AJ, Otvos JD, Goff DC, Wagenknecht LE, Haffner SM. Nuclear magnetic resonance lipoprotein abnormalities in prediabetic subjects in the Insulin Resistance Atherosclerosis Study. Circulation 2005; 111:3465-72.
14 Folch J, Lees M, Sloane-Stanley GH. A simple method for the isolation and purification of total lipides from animal tissues. J Biol Chem 1957; 226:497-509.
15 Kaluzny MA, Duncan LA, Merritt MV, Epps DE. Rapid separation of lipid classes in high yield and purity using bonded phase columns. J Lipid Res 1985; 26:135-40.
16 Lepage G, Roy CC. Direct transesterification of all classes of lipids in a one-step reaction. J Lipid Res 1986; 27:114-20.
17 Al MD, van Houwelingen AC, Kester AD, Hasaart TH, de Jong AE, Hornstra G. Maternal essential fatty acid patterns during normal pregnancy and their relationship to the neonatal essential fatty acid status. Br J Nutr 1995; 74:55-68.
18 Keys A, Anderson JT, Grande F. Serum cholesterol response to changes in the diet IV. Particular saturated fatty acids in the diet. Metabolism 1965; 14:776-86.
19 Mattson FH, Grundy SM. Comparison of effects of dietary saturated, monounsaturated, and polyunsaturated fatty acids on plasma lipids and lipoproteins in man. J Lipid Res 1985; 26:194-202.
20 Mensink RP, Katan MB. Effect of a diet enriched with monounsaturated or polyunsaturated fatty acids on levels of low-density and high-density lipoprotein cholesterol in healthy women and men. N Engl J Med 1989; 321:436-41.
21 Mensink RP, Zock PL, Kester AD, Katan MB. Effects of dietary fatty acids and carbohydrates on the ratio of serum total to HDL cholesterol and on serum lipids and apolipoproteins: a meta-analysis of 60 controlled trials. Am J Clin Nutr 2003; 77:1146-55.
22 Sanders TA. Polyunsaturated fatty acids in the food chain in Europe. Am J Clin Nutr 2000; 71:176S-8S.
23 Kris-Etherton PM, Taylor DS, Yu-Poth S, Huth P, Moriarty K, Fishell V, Hargrove RL, Zhao G, Etherton TD. Polyunsaturated fatty acids in the food chain in the United States. Am J Clin Nutr 2000; 71:179S-88S.
24 Finnegan YE, Minihane AM, Leigh-Firbank EC, Kew S, Meijer GW, Muggli R, Calder PC, Williams CM. Plant- and marine-derived n-3 polyunsaturated fatty acids have differential effects on fasting and postprandial blood lipid concentrations and on the susceptibility of LDL to oxidative modification in moderately hyperlipidemic subjects. Am J Clin Nutr 2003; 77:783-95.
25 Zhao G, Etherton TD, Martin KR, West SG, Gillies PJ, Kris-Etherton PM. Dietary alpha-linolenic acid reduces inflammatory and lipid cardiovascular risk factors in hypercholesterolemic men and women. J Nutr 2004; 134:2991-7.
26 Bemelmans WJ, Broer J, Feskens EJ, Smit AJ, Muskiet FA, Lefrandt JD, Bom VJ, May JF, Meyboom-de Jong B. Effect of an increased intake of alpha-linolenic acid and group nutritional education on cardiovascular risk factors: the Mediterranean Alpha-linolenic Enriched Groningen Dietary Intervention (MARGARIN) study. Am J Clin Nutr 2002; 75:221-7.
27 Kelley DS, Nelson GJ, Love JE, Branch LB, Taylor PC, Schmidt PC, Mackey BE, Iacono JM. Dietary alpha-linolenic acid alters tissue fatty acid composition, but not blood lipids, lipoproteins or coagulation status in humans. Lipids 1993; 28:533-7.
28 Brenna JT. Efficiency of conversion of alpha-linolenic acid to long chain n-3 fatty acids in man. Curr Opin Clin Nutr Metab Care 2002; 5:127-32.
29 Sinclair AJ, Attar-Bashi NM, Li D. What is the role of alpha-linolenic acid for mammals? Lipids 2002; 37:1113-23.
30 Gerster H. Can adults adequately convert alpha-linolenic acid (18:3n-3) to eicosapentaenoic acid (20:5n-3) and docosahexaenoic acid (22:6n-3)? Int J Vitam Nutr Res 1998; 68:159-73.
31 Hayes KC, Khosla P. Dietary fatty acid thresholds and cholesterolemia. Faseb J 1992; 6:2600-7.
32 Freedman DS, Otvos JD, Jeyarajah EJ, Barboriak JJ, Anderson AJ, Walker JA. Relation of lipoprotein subclasses as measured by proton nuclear magnetic resonance spectroscopy to coronary artery disease. Arterioscler Thromb Vasc Biol 1998; 18:1046-53.
33 Tulenko TN, Sumner AE. The physiology of lipoproteins. J Nucl Cardiol 2002; 9:638-49.

34 Rosenson RS, Otvos JD, Freedman DS. Relations of lipoprotein subclass levels and low-density lipoprotein size to progression of coronary artery disease in the Pravastatin Limitation of Atherosclerosis in the Coronary Arteries (PLAC-I) trial. Am J Cardiol 2002; 90:89-94.
35 Campos H, Dreon DM, Krauss RM. Associations of hepatic and lipoprotein lipase activities with changes in dietary composition and low density lipoprotein subclasses. J Lipid Res 1995; 36:462-72.
36 Dreon DM, Fernstrom HA, Miller B, Krauss RM. Low-density lipoprotein subclass patterns and lipoprotein response to a reduced-fat diet in men. Faseb J 1994; 8:121-6.
37 Lu G, Windsor SL, Harris WS. Omega-3 fatty acids alter lipoprotein subfraction distributions and the in vitro conversion of very low density lipoproteins to low density lipoproteins. J Nutr Biochem 1999; 10:151-158.
38 Packard CJ, Munro A, Lorimer AR, Gotto AM, Shepherd J. Metabolism of apolipoprotein B in large triglyceride-rich very low density lipoproteins of normal and hypertriglyceridemic subjects. J Clin Invest 1984; 74:2178-92.

CHAPTER 6

Effects of α-linolenic acid versus those of EPA/DHA on cardiovascular risk markers in healthy elderly subjects

Petra L. L. Goyens, and Ronald P. Mensink

Based on
European Journal of Clinical Nutrition 2006; 60:978-984.

Effects of n-3 fatty acids on cardiovascular risk markers in healthy elderly subjects

ABSTRACT

Objective

To compare the effects of α-linolenic acid (ALA; C18:3n-3) to those of eicosapentaenoic acid (EPA; C20:5n-3) plus docosahexaenoic acid (DHA; C22:6n-3) on cardiovascular risk markers in healthy elderly subjects.

Design

A randomized double-blind nutritional intervention study.

Setting

Department of Human Biology, Maastricht University, the Netherlands.

Subjects

Thirty-seven mildly hypercholesterolemic subjects, 14 men and 23 women aged between 60 and 78 years.

Interventions

During a run-in period of 3 weeks, subjects consumed an oleic acid-rich diet. The following 6 weeks, 10 subjects remained on the control diet, 13 subjects consumed an ALA-rich diet (6.8 g/d) and 14 subjects an EPA/DHA-rich diet (1.05 g EPA/d + 0.55 g DHA/d).

Results

Both n-3 fatty acid diets did not change concentrations of total-cholesterol, LDL-cholesterol, HDL-cholesterol, triacylglycerol and apoA-1 when compared with the oleic acid-rich diet. However, after the EPA/DHA-rich diet, LDL-cholesterol increased by 0.39 mmol/L (P = 0.0323, 95 % CI [0.030, 0.780 mmol/L]) when compared with the ALA-rich diet. Intake of EPA/DHA also increased apoB concentrations by 14 mg/dL (P = 0.0031, 95 % CI [4, 23 mg/dL]) and 12 mg/dL (P = 0.005, 95 % CI [3, 21 mg/dL]) versus the oleic acid and ALA-rich diet, respectively. Except for an EPA/DHA-induced increase in tissue factor pathway inhibitor (TFPI) of 14.6 % (P = 0.0184 vs. ALA diet, 95 % CI [1.5, 18.3 %]), changes in markers of hemostasis and endothelial integrity did not reach statistical significance following consumption of the two n-3 fatty acid diets.

Conclusions

In healthy elderly subjects, ALA might affect concentrations of LDL-cholesterol and apoB more favorably than EPA/DHA, whereas EPA/DHA seems to affect TFPI more beneficially.

Chapter 6

INTRODUCTION

Several intervention studies, such as the GISSI-Prevenzione trial and the Cardiovascular Health Study, have shown that an increased intake of eicosapentaenoic acid (EPA; C20:5n-3) and docosahexaenoic acid (DHA; C22:6n-3) lowers the risk of coronary heart disease (CHD) [1, 2]. Humans can acquire these long chain fatty acids (LCFAs) of the n-3 family directly through consumption of oily fish and seafood, as well as through conversion of α-linolenic acid (ALA; C18:3n-3), a plant-derived n-3 fatty acid which may also protect against CHD [3]. However, results from tracer studies indicate that ALA conversion is too limited to function as a surrogate for fish intake [4-7]. This suggests that these n-3 fatty acids derived from different sources, might have their own specific effects on cardiovascular risk markers. However, the number of human studies that have directly compared the influence of ALA and its LCFA derivates on a wide range of cardiovascular risk markers is sparse. It is known, however, that the potential to lower triacylglycerol concentrations in blood by the marine fatty acids is not shared by ALA [8]. In contrast, results from a recent study by Finnegan et al. suggest that ALA and EPA/DHA have comparable effects on blood coagulation and fibrinolytic factors [9, 10]. Studies with regard to the effects of plant and marine derived n-3 fatty acids on endothelial markers are still sparse.

Most studies so far have been performed in young and middle-aged subjects. Surprisingly, less effort has been made to elucidate how ALA and fish oil affect cardiovascular risk markers in elderly subjects, considering that the risk for CHD builds up with increasing age and the occurrence of CHD is most overt from the age of 60 years [11]. As decreasing cardiovascular risk is of benefit for this population, elderly may also profit from increased n-3 fatty acid consumption to lower the cardiovascular risk [12, 13]. However, for aged subjects it is not clear to what extent cardiovascular risk markers are susceptible to dietary modulation with n-3 fatty acids. Therefore, the aim of the present study was to assess the effects of ALA with those of EPA/DHA on lipoprotein profile, on coagulation and fibrinolytic factors, and on endothelial function in subjects aged between 60 and 78 years.

MATERIAL AND METHODS

Subjects

Subjects were recruited in Maastricht and surroundings through advertisements in local newspapers and posters in university and public buildings. People, who were interested, were informed in detail about the nature and purpose of the study, which was approved

by the Medical Ethics Committee of Maastricht University. After giving their written informed consent, 48 volunteers participated in the screening procedure, which consisted of measurement of height, weight and blood pressure, and collection of a morning specimen of urine to verify the absence of glucose and protein. Further, subjects had to fill out a medical questionnaire, while two fasting blood samples, separated by a period of at least 3 days, were drawn to determine serum lipids and lipoprotein concentrations. A total of 41 subjects, who met the following inclusion criteria, were enrolled in the study: serum total cholesterol concentration < 8.0 mmol/L, triacylglycerol concentration < 3.0 mmol/L, absence of glucose and proteinuria, and no use of medication or prescribed diets known to affect the parameters of interest. All subjects were apparently healthy, as indicated by a medical questionnaire. Two subjects were excluded during the study, as they had to take non-steroidal anti-inflammatory drugs, whereas one subject stopped due to family circumstances. The remaining 38 mildly hypercholesterolemic subjects, 14 men and 23 women, completed the study. The subjects' characteristics of each study group as measured at the start of the study are presented in **Table 1**. Thirty-seven subjects were studied as one female subject was excluded prior to analysis of the results, due to incomplete data.

Table 1
Subject characteristics measured at the start of the study

	Oleic acid group $n = 10$	ALA group $n = 13$	EPA/DHA group $n = 14$
Number of men/women	4/6	5/8	5/9
Men			
Age (y)	63 ± 3	63 ± 2	63 ± 2
Weight (kg)	86 ± 7	77 ± 5	82 ± 11
Height (m)	1.76 ± 0.04	1.72 ± 0.05	1.7 ± 0.04
Women			
Age (y)	67 ± 7	66 ± 5	66 ± 4
Weight (kg)	62 ± 9	73 ± 12	68 ± 5
Height (m)	1.58 ± 0.06	1.65 ± 0.05	1.67 ± 0.05

Values are means ± SD.

Experimental design and diets

During the run-in period of 3 weeks, all 37 subjects consumed an oleic acid-rich diet. For the subsequent 6 weeks, 10 subjects continued on the run-in oleic acid diet, 13 subjects received a diet rich in ALA and the remaining 14 subjects received a diet enriched with EPA and DHA. Subjects were randomly allocated to the three intervention groups, stratified for gender, as was described previously [14].

Subjects were provided with a specific amount of products made from experimental shortenings (**Table 2**). The experimental products were free of charge and consisted of chocolate paste, pies, cake, and spreads. They were supplied, on a weekly basis, to each participant individually. In order to prevent oxidation of the highly unsaturated fatty acids, no heating was used for the preparation of the experimental products and subjects were not allowed to use the spreads for baking or frying. Each subject consumed on average 30 g of experimental shortenings, which provided 6.8 g ALA for the ALA group and 1.05 g EPA plus 0.55 g DHA for the EPA/DHA group. At the end of both the run-in and the intervention periods, subjects had to weigh and record their food intakes for two working days and one weekend day to estimate energy and nutrient intakes [15]. In addition, subjects were asked to list in a diary any signs of illness, medication used, alcoholic beverages and deviations from the study protocol. Diaries were checked weekly and in the presence of the subjects. Subjects of the oleic acid and ALA group were not allowed to consume fish or seafood. Further, all subjects were asked not to change their usual physical activity pattern, smoking habits and use of oral contraceptives during the course of the study. Body weight, without shoes or heavy clothing, was recorded once a week and, if necessary, energy intake was adjusted.

Blood sampling and analyses

During the last week of both the run-in period and the experimental period, blood was sampled three times after an overnight fast of at least 12 h, abstinence of smoking on the morning before blood sampling and a 24 h abstinence of alcohol. After 15 min of rest, an infusion needle (1.0 mm/G19, Microflex, Ecouen, France) was inserted into an antecubetal vein with the subject in a recumbent position. Blood was first drawn into a 10 mL clotting-tube for measurements of serum lipids and lipoproteins. Then blood was sampled into two 5 mL tubes containing citrate, theophylline, adenosine and dipyridamole (CTAD) and centrifuged at 2000 g (10 min, 4 °C). One tube was kept for analysis of plasminogen activator inhibitor (PAI) activity, whereas the other tube was further centrifuged at 11500 g (30 min, 4 °C) and used for analysis of coagulation factors. Standard pool plasmas were obtained from 15 normolipidemic men and women according to the methods described above. Factor VIIam and tissue factor pathway inhibitor (TFPI) activities were expressed as percentage of standard plasma.

After clotting for at least 1 h at room temperature, serum was obtained by centrifugation of the clotting-tubes at 2000 g for 30 min at 4 °C. Serum samples were stored at -80 °C until later analysis. At the end of the study, the three samples from the run-in period as well as the three samples from the experimental period were pooled (1:1:1, v/v) prior to the analyses and all samples from one subject were analyzed within one run.

Serum concentrations of total cholesterol (CHOD-PAP method; Monotest cholesterol, Boehringer Mannheim, Mannheim, Germany), HDL cholesterol (precipitation method; Monotest cholesterol, Boehringer Mannheim, Mannheim, Germany) and triacylglycerols (GPO-Trinder; Sigma Diagnostics, St. Louis, MO, USA) were analyzed enzymatically. Concentrations of LDL cholesterol were calculated with the Friedewald equations [16]. Apolipoprotein (apo) A-1 and apoB were measured in serum, with an immunoturbidimetric reaction (UNI-KIT apoA-I and UNI-KIT apoB, Roche, Basel, Switzerland). Plasma fibrinogen concentrations were measured according to the method of Clauss [17]. Factor VII amidolytic (factor VIIam) activity was determined using a two-stage chromogenic assay as described elsewhere (Coaset F.VII, Chromogenix Instrumentation Laboratory, Milano, Italy) while prothrombin activation fragment 1 + 2 was determined with an enzyme-linked immunoassay (ELISA; Enzygnost F 1 + 2 micro, Behring Diagnostics Inc., Westwood, MA, USA) [18]. TFPI activity was determined according to the method of Sandset [19] and PAI activity was measured with a two-stage indirect chromogenic assay (Spectrolyse®/pL PAI, Biopool, Umea, Sweden). Commercially available ELISAs were used to measure concentrations of von Willebrand factor (Asserachrom vWF, Boehringer Mannheim, Germany) thrombomodulin (Asserachrom Thrombomodulin, Diagnostica Stago, Asnière, France), E-selectin (sE-selectin ELISA, Bender MedSystems, Boehringer Ingelheim Bioproducts, Germany) and P-selectin (sP-selectin ELISA, Bender MedSystems, Boehringer Ingelheim Bioproducts, Germany) and vascular cell adhesion molecule-1 (sVCAM-1 ELISA, Bender MedSystems, Boehringer Ingelheim Bioproducts, Germany). Analysis of the fatty acid composition of erythrocyte neutral phospholipids has already been described in detail [14].

Statistics

The statistical power to detect a true difference of at least 20 % in the parameters of interest was more than 80 % for the thrombotic parameters and more than 90 % for the lipoproteins. For each subject, the responses to the treatments were analyzed with one-factor analysis of covariance, using the GLM procedure in SAS (SAS version 8.0, Copyright 1999 SAS Institute Inc., Cary, NC, USA). The parameters of interest followed a normal distribution. The values at the end of the experimental period represented the dependent variables, whereas the values at the end of the run-in period were included as covariates and the type of the diet was defined as a fixed factor.

When a significant effect of the diet was found ($P < 0.05$), a Tukey post-hoc test was used to compare the diets pair wise. All values were expressed as means with their standard deviation.

Table 2
Fatty acid composition of the experimental shortenings

	Type of shortening [1]		
	Oleic acid group n = 10	ALA group n = 13	EPA/DHA group n = 14
Σ Saturated fatty acids	27.7	22.0	26.6
C14:0	0.6	0.3	3.3
C16:0	18.2	13.3	13.8
C18:0	6.9	7.1	7.1
Σ Monounsaturated fatty acids	63.1	45.1	56.4
C16:1n-7	0.1	0.1	3.8
C18:1n-9	62.0	43.9	50.9
Σ Polyunsaturated fatty acids	9.4	32.7	15.1
Σ n-6 fatty acids	9.2	11.0	9.1
C18:2n-6	9.2	10.9	8.7
Σ n-3 fatty acids	0.2	21.7	6.2
C18:3n-3	0.1	21.5	0.5
C20:5n-3	0.0	0.0	3.2
C22:6n-3	0.0	0.0	1.6

Values are expressed in % of total fatty acids identified.
[1] For details of shortenings, see p. 184 in Wensing *et al.* (1999).

RESULTS

Body weight, dietary intake and erythrocyte phospholipids composition

Changes in body weight during the experimental period were not significantly different ($P = 0.201$) between the three groups and were -0.1 ± 0.8 kg (mean ± SD) for the oleic acid group, 0.1 ± 1.2 kg for the ALA group and 0.5 ± 0.6 kg for the EPA/DHA group. Energy intake during the study was not significantly different between the three study groups (**Table 3**). Compared to the oleic acid group, MUFA intake decreased however significantly by 3.6 En% in the ALA group ($P = 0.027$, 95 % CI [-5.3, -0.3 En%]).

The total PUFA intake was increased in the ALA group by 5.1 En% when compared to the oleic acid group ($P < 0.001$, 95 % CI [1.7, 6.4 En%]) and by 3.1 En% when compared to the EPA/DHA group ($P = 0.02$, 95 % CI [0.4, 4.4 En%].

The effects of the three study diets on the fatty acid composition of the erythrocytes neutral phospholipids have already been described [14]. Briefly, none of the three diets changed the proportions of SAFA, MUFA and PUFA significantly in the erythrocyte phospholipids. As expected, the proportion of ALA remained unchanged after consumption of the oleic acid and EPA/DHA diet, whereas it significantly increased with 0.4 % after consumption of the ALA diet ($P < 0.001$ vs. control diet and vs. EPA/DHA diet). Compared to the oleic acid and ALA groups, the proportion of C18:2n-6 decreased significantly with 2.2 % in the EPA/DHA group ($P < 0.01$ vs. control group and $P < 0.001$ vs. ALA group). This decrease was accompanied by a significant increase of 1.3 % in the proportion of EPA ($P = 0.001$ vs. control and vs. ALA group) and of 0.8 % in the proportion of DHA ($P = 0.001$ vs. control and vs. ALA group).

Lipids and lipoproteins

Changes in total cholesterol were not significantly different between the three groups (**Table 4**). Compared with the oleic acid diet, the ALA diet and the EPA/DHA diet also had similar effects on LDL. When compared with the ALA group, however, the EPA/DHA diet increased LDL cholesterol with 0.39 mmol/L ($P = 0.0323$, 95 % confidence interval for the difference in change: [0.030, 0.780 mmol/L]). These effects were also evident for apoB. No difference was observed between the oleic acid group and the ALA group, while apoB concentrations increased in the EPA/DHA group with 14 mg/dL ($P = 0.0031$, 95 % CI [4, 23 mg/dL]) when compared with the oleic acid group and with 12 mg/dL when compared with the ALA group ($P = 0.005$, 95 % CI [3, 21 mg/dL]). Triacylglycerol concentrations decreased insignificantly on the EPA/DHA group when compared to both the oleic acid and ALA group. Changes in HDL cholesterol, the total to HDL cholesterol ratio, and apoA-I were also comparable between the three diets.

Table 3
Mean daily energy and nutrient intakes of the oleic acid group, the ALA group and the EPA/DHA group [1]

	Oleic acid group n = 10			ALA group n = 13			EPA/DHA group n = 14		
Energy (MJ/d)									
Run-in period	9.0	±	1.7	8.8	±	1.7	9.6	±	1.5
Experimental period	9..3	±	2.4	9.2	±	2.0	8.4	±	1.5
Change	0.3	±	2.2	0.3	±	1.2	-1.2	±	1.6
Protein (En%)									
Run-in period	13.9	±	2.4	14.8	±	2.2	13.3	±	1.8
Experimental period	13.7	±	1.9	13.3	±	1.5	13.5	±	2.5
Change	-0.2	±	2.1	-1.5	±	1.7	0.3	±	3.2
Carbohydrates (En%)									
Run-in period	43.5	±	6.8	42.3	±	3.9	40.9	±	5.0
Experimental period	41.7	±	5.9	44.2	±	5.3	43.0	±	3.0
Change	-1.8	±	5.3	1.9	±	4.2	2.1	±	6.2
Fat (En%)									
Run-in period	40.0	±	6.0	41.4	±	4.5	43.4	±	4.3
Experimental period	40.8	±	7.1	41.0	±	5.2	41.9	±	2.8
Change	0.8	±	7.1	-0.4	±	4.6	-1.6	±	5.2
SAFA (En%)									
Run-in period	13.2	±	2.6	14.4	±	1.9	14.6	±	1.8
Experimental period	14.2	±	3.2	13.5	±	2.2	14.2	±	1.4
Change	1.0	±	2.7	-0.9	±	1.9	-0.4	±	1.8
MUFA (En%)									
Run-in period	17.4	±	2.9	19.0	±	3.3	20.4	±	2.8
Experimental period	17.7	±	3.9	15.7	±	2.0	17.7	±	2.2
Change	0.3	±	3.0 [a]	-3.3	±	2.4 [b]	-2.7	±	3.0 [a, b]
PUFA (En%)									
Run-in period	6.5	±	1.6	4.9	±	0.9	5.9	±	1.0
Experimental period	5.5	±	1.9	9.1	±	2.4	7.0	±	1.5
Change	-0.9	±	2.3 [a]	4.2	±	2.1 [b]	1.1	±	2.0 [a]
LA (En%)									
Run-in period	4.9	±	1.2	3.8	±	0.8	4.6	±	1.0
Experimental period	4.1	±	1.8	4.7	±	1.9	4.6	±	1.9
Change	-0.8	±	2.2	0.9	±	1.7	0.0	±	2.2
ALA (En%) [2]									
Run-in period	0.02	±	0.01	0.02	±	0.01	0.02	±	0.01
Experimental period	0.01	±	0.01	3.23	±	0.70	0.06	±	0.02
Change	-0.00	±	0.00 [a]	3.21	±	0.70 [b]	0.05	±	0.02 [a]
EPA/DHA (En%) [2]									
Run-in period	0.0	±	0.0	0.0	±	0.0	0.0	±	0.0
Experimental period	0.0	±	0.0	0.0	±	0.0	0.7	±	0.1
Change	0.0	±	0.0 [a]	0.0	±	0.0 [a]	0.7	±	0.1 [b]

SAFA, saturated fatty acids; MUFA, monounsaturated fatty acids; PUFA, polyunsaturated fatty acids; LA, linoleic acid; ALA, α-linolenic acid.

[1] Values are means ± SD. Data were analyzed using analysis of covariance with the values from the end of the run-in period as covariate, and diet as fixed factor. Means in a row with superscripts without a common letter differ, $P < 0.05$ (Tukey post-hoc tests for pairwise comparisons).

[2] As provided by the experimental fats only.

Table 4
Effects of diets on serum lipid and lipoprotein concentrations [1]

	Oleic acid group n = 10			ALA group n = 13			EPA/DHA group n = 14		
Total cholesterol (mmol/L)									
Run-in period	6.16	±	0.94	6.28	±	0.89	6.57	±	1.24
Experimental period	6.17	±	0.83	6.04	±	0.98	6.69	±	1.21
Change	0.01	±	0.46	-0.24	±	0.52	0.12	±	0.53
LDL cholesterol (mmol/L)									
Run-in period	4.00	±	0.84	4.36	±	0.84	4.48	±	1.20
Experimental period	4.06	±	0.71	4.13	±	0.83	4.64	±	1.17
Change	0.06	±	0.37 [a, b]	-0.23	±	0.41 [a]	0.16	±	0.44 [b]
HDL cholesterol (mmol/L)									
Run-in period	1.60	±	0.67	1.42	±	0.35	1.55	±	0.37
Experimental period	1.62	±	0.67	1.42	±	0.50	1.59	±	0.46
Change	0.02	±	0.17	0.00	±	0.21	0.04	±	0.21
Triacylglycerol (mmol/L)									
Run-in period	1.13	±	0.51	1.03	±	0.38	1.10	±	0.58
Experimental period	0.99	±	0.46	0.99	±	0.52	0.92	±	0.46
Change	-0.14	±	0.27	-0.03	±	0.22	-0.18	±	0.31
Total to HDL cholesterol ratio									
Run-in period	4.41	±	1.70	4.64	±	1.12	4.42	±	1.17
Experimental period	4.29	±	1.45	4.58	±	1.25	4.47	±	1.34
Change	-0.12	±	0.91	-0.06	±	0.42	0.04	±	0.54
Apo AI (mg/dL)									
Run-in period	167	±	46	167	±	42	167	±	30
Experimental period	165	±	47	165	±	45	172	±	39
Change	-2	±	12	-2	±	10	5	±	16
Apo B (mg/dL)									
Run-in period	108	±	21	117	±	20	116	±	28
Experimental period	104	±	20	115	±	17	126	±	34
Change	-4	±	7 [a]	-2	±	10 [a]	10	±	10 [b]

[1] Values are means ± SD. Data were analyzed using analysis of covariance with the values from the end of the run-in period as covariate, and diet as fixed factor. Means in a row with superscripts without a common letter differ, $P < 0.05$ (Tukey post-hoc tests for pairwise comparisons).

Markers for endothelial function, adhesion molecules, blood coagulation and fibrinolytic parameters

The change in TFPI was significantly different between the ALA and EPA/DHA group (P = 0.0184, 95 % CI [1.5, 18.3 %]) (**Table 5**). Other changes in markers for blood coagulation and fibrinolysis were not different between the three groups. No significant dietary effects were found on markers for endothelial function (**Table 6**).

Table 5
Effects of diets on coagulation and fibrinolysis [1]

	Oleic acid group n = 10	ALA group n = 13	EPA/DHA group n = 14
Fibrinogen (g/L)			
Run-in period	3.0 ± 0.4	3.1 ± 0.4	3.0 ± 0.2
Experimental period	3.0 ± 0.3	3.0 ± 0.4	3.1 ± 0.4
Change	0.0 ± 0.3	0.0 ± 0.3	0.1 ± 0.3
Factor VIIam activity (% of standard)			
Run-in period	83.8 ± 24.4	91.5 ± 15.8	87.6 ± 25.0
Experimental period	88.2 ± 27.2	89.5 ± 16.1	89.9 ± 26.0
Change	4.4 ± 8.1	-2.1 ± 9.5	2.3 ± 6.8
Fragment 1+2 (nmol/L)			
Run-in period	1.6 ± 0.4	1.3 ± 0.3	1.9 ± 1.4
Experimental period	1.6 ± 0.3	1.5 ± 0.4	1.5 ± 0.4
Change	0.0 ± 0.3	0.2 ± 0.2	-0.4 ± 1.1
Tissue factor pathway inhibitor (TFPI) (% of standard)			
Run-in period	93.8 ± 8.8	99.2 ± 11.0	92.6 ± 7.9
Experimental period	98.3 ± 10.2	96.5 ± 10.1	104.5 ± 4.9
Change	4.5 ± 6.9 [a, b]	-2.7 ± 13.2 [a]	11.9 ± 9.9 [b]
Plasminogen activator inhibitor activity (PAI) (IU/L)			
Run-in period	13.2 ± 7.2	13.2 ± 8.4	12.8 ± 7.0
Experimental period	13.2 ± 9.2	14.8 ± 8.6	13.0 ± 6.4
Change	0.0 ± 6.6	1.6 ± 5.9	0.2 ± 5.1

[1] Values are means ± SD. Data were analyzed using analysis of covariance with the values from the end of the run-in period as covariate, and diet as fixed factor. Means in a row with superscripts without a common letter differ, P < 0.05 (Tukey post-hoc tests for pairwise comparisons).

Table 6
Effects of diets on markers for endothelial function and adhesion molecules [1]

	Oleic acid group n = 10			ALA group n = 13			EPA/DHA group n = 14		
Von Willebrand factor (% of standard)									
Run-in period	108	±	21.4	113.9	±	10.5	116.4	±	13.2
Experimental period	108.7	±	16.7	116.7	±	12.4	111.5	±	14.3
Change	1	±	19.8	2.8	±	6.5	-4.9	±	15.7
Thrombomodulin (ng/mL)									
Run-in period	18.4	±	8.4	21.3	±	13.0	18.9	±	9.8
Experimental period	16.4	±	6.3	21.2	±	12.0	17.7	±	9.7
Change	-2.1	±	7.1	-0.1	±	4.3	-1.2	±	5.9
E-selectin (ng/mL)									
Run-in period	42.2	±	15.6	46.0	±	10.9	45.3	±	11.9
Experimental period	44.5	±	12.8	50.0	±	9.1	45.8	±	15.8
Change	2.4	±	10.8	4.0	±	11.4	0.5	±	9.6
P-selectin (ng/mL)									
Run-in period	353	±	136.6	355.3	±	115.6	385.1	±	143.2
Experimental period	367.6	±	143.7	344.2	±	138.0	346.9	±	160.7
Change	15	±	78.8	-11.1	±	74.7	-38.2	±	79.0
VCAM (ng/mL)									
Run-in period	1280	±	209	1479.2	±	264.4	1446.8	±	276.3
Experimental period	1286.8	±	300.4	1507.9	±	407.2	1465.5	±	326.7
Change	6	±	208	28.7	±	279.7	18.7	±	128.6

[1] Values are means ± SD. Data were analyzed using analysis of covariance with the values from the end of the run-in period as covariate, and diet as fixed factor. There were no significant differences between the 3 diets.

DISCUSSION

In the present study, the effects of the plant-derived ALA and the fish-derived EPA and DHA were examined on cardiovascular risk markers in mildly hypercholesterolemic elderly subjects. We found that EPA/DHA significantly increased LDL-cholesterol and apoB concentrations as well as TFPI activity when compared with ALA.

The number of studies which have addressed side-by-side the effects of ALA and EPA/DHA on cardiovascular risk markers is scarce. In a recent study, Finnegan et al. gave hyperlipidemic subjects aged 25 - 72 years for 4 weeks an n-6 fatty acid-rich control diet [10]. For the next 6 months, subjects were randomized over the control diet, a diet providing 0.8 g or 1.7 g EPA/DHA per day, or a diet supplying 4.5 g or 9.5 g ALA daily. None of the diets enriched with n-3 polyunsaturated fatty acids changed

fasting serum lipid concentrations, when compared with the n-6 fatty acid control diet. These results agreed well with our results, as we also observed no significant changes in serum lipid and lipoprotein concentrations of the two n-3 fatty acid diets, when compared with the control diet rich in oleic acid. Finnigan et al. [10] further reported that serum triacylglycerol concentrations decreased and those of LDL tended to increase in the group consuming 1.7 g EPA/DHA when compared to the 9.5 g ALA group. In our study, EPA/DHA also increased LDL cholesterol concentration when compared with ALA. An LDL-cholesterol increasing effect of fish oil is a common phenomenon, especially in hypertriglyceridemic subjects [8]. Furthermore, we did not observe a significant hypotriglyceridemic effect after a comparable EPA/DHA intake of 1.6 g/d either. However, as reviewed by Harris, triacylglycerol decreased (from 1 % to 34 % compared to control) in studies which provided less than 2 g EPA/DHA per day, but this decrease was often not statistically significant [20]. Furthermore, subjects in the present study had a rather low baseline triacylglycerol concentration, which might have hampered a possible triacylglycerol-lowering effect of marine fatty acids.

It has been suggested by Sanders that elderly might benefit more from an improvement of factors influencing blood clotting and fibrinolysis than of other factors involved in the atherogenic process [21]. The few studies in young and middle aged subjects that have examined the influence of ALA on factors of coagulation or fibrinolysis did, in general, not report any significant effects [22], whereas studies with fish fatty acids yielded equivocal results. The activity of the fibrinolytic factor PAI-1, for example, did either not change or even increased after EPA/DHA supplementation [23, 24]. In view of these contrasting findings, Hansen et al. therefore pooled data obtained from 17 studies which provided n-3 fatty acids in doses varying from 1.6 g/d to 9.0 g/d [25]. It was concluded that there is no strong evidence for unfavorable, clinically relevant effects of n-3 fatty acids on PAI-1 activity in plasma [25]. However, as recently reviewed [26], modulating effects of EPA/DHA on coagulation factors such as fibrinogen, factor VII and von Willebrand factor were in general observed after intakes of at least 4 g/d, while most studies could not detect an effect when EPA/DHA intake was between 0.9 g/d and 4 g/d. In addition, studies that have specifically compared side-by-side effects of plant and marine derived n-3 fatty acids suggest that these fatty acids have similar effects on hemostasis and fibrinolysis in young and middle-aged subjects, both at realistic and rather high intakes [9, 27]. Though most markers of blood coagulation and fibrinolysis did not change significantly after consumption of any of our study diets, we did observe an increase in TFPI activity after consumption of the EPA/DHA diet when compared to the ALA diet. However, we did not find an effect of the EPA/DHA diet on TFPI activity when compared to the oleic-acid rich control diet. Grundt et al. found also no effect on TFPI when subjects with combined hyperlipidemia consumed for 12 weeks either a daily supplement of 4 g EPA/DHA or a corn oil supplement, rich in linoleic acid [28].

In contrast, Berretini et al. found a significant increase in TFPI levels in plasma of subjects with chronic atherosclerotic disease following a daily supplementation with 3 g EPA/DHA over a period of 16 weeks [29].

Results of Miles et al suggested that effects of fish oil on endothelial activation were age-dependent. In that study, fish oil did not affect sVCAM-1 and increased sE-selectin in young men (< 40 years) but significantly decreased sVCAM-1 and tended to lower sE-selectin in the older subjects (> 55 years) [30]. Thies et al. compared the influence of moderate intakes of ALA, DHA, and fish oil on plasma-soluble adhesion molecules [31]. It was found that, in contrast to DHA alone, both ALA and fish oil supplementation decreased sVCAM-1 and sE-selectin compared to the placebo supplement (an 80:20 mix of palm and sunflowerseed oils). This finding implies that the observed favorable effects are specific for EPA and/or ALA. Zhao et al. also found a decrease in sVCAM-1 and sE-selectin in hypercholesterolemic subjects aged between 36 and 65 years, after consumption of a diet rich in ALA (6.5 En% ALA/day or 13-28 g/d) [32]. In the study by Rallides et al. a decrease in sVCAM-1, but not in sE-selectin was observed in dyslipidemic subjects, after intake of 8.1 g ALA/day (15 mL/d of linseed oil) over a period of 12 weeks [33]. In contrast to these studies, our study shows that all three diets had comparable effects on plasma-soluble adhesion molecules and soluble selectins. Hence, based on our results, we can not attribute a beneficial effect to ALA or the marine fatty acids with regard to markers of endothelial integrity in healthy elderly. We do not think that the amount of ingested EPA/DHA in the present study was too low to induce an effect on endothelial markers, as other studies showed beneficial effects after low to moderate intakes of n-3 fish fatty acids [30, 31, 34-36]. Our study duration was however shorter than that of other studies, which may have masked any beneficial effects of EPA/DHA on these endothelial markers. In combination with the study duration, the intake of ALA might also have been too low to observe effects on sVCAM-1 and sE-selectin within a period of 6 weeks. Even though ALA intake in the study by Thies et al [31] was lower (2 g/d than in the present study, the study duration was two times longer. In contrast, the study by Zhao et al. [32] also lasted 6 weeks, but ALA intake was at least twice as high. Thus, no clear explanation exists to explain the divergent effects of ALA on endothelial markers.

In summary, our findings indicate that n-3 fatty acids from both plant and marine sources do not affect the lipid profile equally favorable in elderly subjects as oleic acid. Except for the already beneficial effects on aggregation [14], fish fatty acids also seem to influence TFPI activity favorably. These positive effects of EPA/DHA are however counterbalanced by an increase in LDL-cholesterol and apoB concentrations. Adhesion molecules were not affected by any of the n-3 fatty acids when compared to oleic acid.

REFERENCES

1 GISSI-Prevenzione-Investigators. Dietary supplementation with n-3 polyunsaturated fatty acids and vitamin E after myocardial infarction: results of the GISSI-Prevenzione trial. Gruppo Italiano per lo Studio della Sopravvivenza nell'Infarto miocardico. Lancet 1999; 354:447-55.

2 Lemaitre RN, King IB, Mozaffarian D, Kuller LH, Tracy RP, Siscovick DS. n-3 Polyunsaturated fatty acids, fatal ischemic heart disease, and nonfatal myocardial infarction in older adults: the Cardiovascular Health Study. Am J Clin Nutr 2003; 77:319-25.

3 de Lorgeril M, Renaud S, Mamelle N, Salen P, Martin JL, Monjaud I, Guidollet J, Touboul P, Delaye J Mediterranean alpha-linolenic acid-rich diet in secondary prevention of coronary heart disease. Lancet 1994; 343:1454-9.

4 Burdge G. Alpha-linolenic acid metabolism in men and women: nutritional and biological implications. Curr Opin Clin Nutr Metab Care 2004; 7:137-44.

5 Goyens PL, Spilker ME, Zock PL, Katan MB, Mensink RP. Compartmental modeling to quantify alpha-linolenic acid conversion after longer term intake of multiple tracer boluses. J Lipid Res 2005; 46:1474-83.

6 Emken EA, Adlof RO, Gulley RM. Dietary linoleic acid influences desaturation and acylation of deuterium-labeled linoleic and linolenic acids in young adult males. Biochim Biophys Acta 1994; 1213:277-88.

7 Pawlosky RJ, Hibbeln JR, Novotny JA, Salem N, Jr. Physiological compartmental analysis of alpha-linolenic acid metabolism in adult humans. J Lipid Res 2001; 42:1257-65.

8 Harris WS. n-3 fatty acids and serum lipoproteins: human studies. Am J Clin Nutr 1997; 65:1645S-1654S.

9 Finnegan YE, Howarth D, Minihane AM, Kew S, Miller GJ, Calder PC, Williams CM. Plant and marine derived (n-3) polyunsaturated fatty acids do not affect blood coagulation and fibrinolytic factors in moderately hyperlipidemic humans. J Nutr 2003; 133:2210-3.

10 Finnegan YE, Minihane AM, Leigh-Firbank EC, Kew S, Meijer GW, Muggli R, Calder PC, Williams CM. Plant- and marine-derived n-3 polyunsaturated fatty acids have differential effects on fasting and postprandial blood lipid concentrations and on the susceptibility of LDL to oxidative modification in moderately hyperlipidemic subjects. Am J Clin Nutr 2003; 77:783-95.

11 Assmann G, Carmena R, Cullen P, Fruchart JC, Jossa F, Lewis B, Mancini M, Paoletti R. Coronary heart disease: reducing the risk: a worldwide view. International Task Force for the Prevention of Coronary Heart Disease. Circulation 1999; 100:1930-8.

12 Mozaffarian D, Lemaitre RN, Kuller LH, Burke GL, Tracy RP, Siscovick DS. Cardiac benefits of fish consumption may depend on the type of fish meal consumed: the Cardiovascular Health Study. Circulation 2003; 107:1372-7.

13 Mozaffarian D, Kumanyika SK, Lemaitre RN, Olson JL, Burke GL, Siscovick DS. Cereal, fruit, and vegetable fiber intake and the risk of cardiovascular disease in elderly individuals. JAMA 2003; 289:1659-66.

14 Wensing AG, Mensink RP, Hornstra G. Effects of dietary n-3 polyunsaturated fatty acids from plant and marine origin on platelet aggregation in healthy elderly subjects. Br J Nutr 1999; 82:183-91.

15 Stichting Nevo. NEVO tabel, Nederlands voedingsstoffenbestand (Dutch food composition table). Den Haag: Voorlichtingsbureau voor de voeding, 1996.

16 Friedewald WT, Levy RI, Fredrickson DS. Estimation of the concentration of low-density lipoprotein cholesterol in plasma, without use of the preparative ultracentrifuge. Clin Chem 1972; 18:499-502.

17 Clauss A. [Rapid physiological coagulation method in determination of fibrinogen.]. Acta Haematol 1957; 17:237-46.

18 Temme EH, Mensink RP, Hornstra G. Effects of diets enriched in lauric, palmitic or oleic acids on blood coagulation and fibrinolysis. Thromb Haemost 1999; 81:259-63.

19 Sandset PM, Abildgaard U, Pettersen M. A sensitive assay of extrinsic coagulation pathway inhibitor (EPI) in plasma and plasma fractions. Thromb Res 1987; 47:389-400.

20 Harris WS. Omega-3 long-chain PUFA and triglyceride lowering: minimum effective intakes. Eur Heart J Supplements 2001; 3:D59-D61.

21 Sanders TA. Effects of unsaturated fatty acids on blood clotting and fibrinolysis. Curr Opin Lipidol 1996; 7:20-3.

22 Allman-Farinelli MA, Hall D, Kingham K, Pang D, Petocz P, Favaloro EJ. Comparison of the effects of two low fat diets with different alpha-linolenic:linoleic acid ratios on coagulation and fibrinolysis. Atherosclerosis 1999; 142:159-68.
23 Miller GJ. Dietary fatty acids and the haemostatic system. Atherosclerosis 2005; 179:213-27.
24 Hornstra G. Influence of dietary fat type on arterial thrombosis tendency. J Nutr Health Aging 2001; 5:160-6.
25 Hansen J, Grimsgaard S, Nordoy A, Bonaa KH. Dietary supplementation with highly purified eicosapentaenoic acid and docosahexaenoic acid does not influence PAI-1 activity. Thromb Res 2000; 98:123-32.
26 Wijendran V, Hayes KC. Dietary n-6 and n-3 fatty acid balance and cardiovascular health. Annu Rev Nutr 2004; 24:597-615.
27 Freese R, Mutanen M. Alpha-linolenic acid and marine long-chain n-3 fatty acids differ only slightly in their effects on hemostatic factors in healthy subjects. Am J Clin Nutr 1997; 66:591-8.
28 Grundt H, Nilsen DW, Hetland O, Mansoor MA, Aarsland T, Woie L. Atherothrombogenic risk modulation by n-3 fatty acids was not associated with changes in homocysteine in subjects with combined hyperlipidaemia. Thromb Haemost 1999; 81:561-5.
29 Berrettini M, Parise P, Ricotta S, Iorio A, Peirone C, Nenci GG. Increased plasma levels of tissue factor pathway inhibitor (TFPI) after n-3 polyunsaturated fatty acids supplementation in patients with chronic atherosclerotic disease. Thromb Haemost 1996; 75:395-400.
30 Miles EA, Thies F, Wallace FA, Powell JR, Hurst TL, Newsholme EA, Calder PC. Influence of age and dietary fish oil on plasma soluble adhesion molecule concentrations. Clin Sci (Lond) 2001; 100:91-100.
31 Thies F, Miles EA, Nebe-von-Caron G, Powell JR, Hurst TL, Newsholme EA, Calder PC. Influence of dietary supplementation with long-chain n-3 or n-6 polyunsaturated fatty acids on blood inflammatory cell populations and functions and on plasma soluble adhesion molecules in healthy adults. Lipids 2001; 36:1183-93.
32 Zhao G, Etherton TD, Martin KR, West SG, Gillies PJ, Kris-Etherton PM. Dietary alpha-linolenic acid reduces inflammatory and lipid cardiovascular risk factors in hypercholesterolemic men and women. J Nutr 2004; 134:2991-7.
33 Rallidis LS, Paschos G, Papaioannou ML, Liakos GK, Panagiotakos DB, Anastasiadis G, Zampelas A. The effect of diet enriched with alpha-linolenic acid on soluble cellular adhesion molecules in dyslipidaemic patients. Atherosclerosis 2004; 174:127-32.
34 Berstad P, Seljeflot I, Veierod MB, Hjerkinn EM, Arnesen H, Pedersen JI. Supplementation with fish oil affects the association between very long-chain n-3 polyunsaturated fatty acids in serum non-esterified fatty acids and soluble vascular cell adhesion molecule-1. Clin Sci (Lond) 2003; 105:13-20.
35 Baro L, Fonolla J, Pena JL, Martinez-Ferez A, Lucena A, Jimenez J, Boza JJ, Lopez-Huertas E. n-3 Fatty acids plus oleic acid and vitamin supplemented milk consumption reduces total and LDL cholesterol, homocysteine and levels of endothelial adhesion molecules in healthy humans. Clin Nutr 2003; 22:175 82.
36 Hjerkinn EM, Seljeflot I, Ellingsen I, Berstad P, Hjermann I, Sandvik L, Arnesen H. Influence of long-term intervention with dietary counseling, long-chain n-3 fatty acid supplements, or both on circulating markers of endothelial activation in men with long-standing hyperlipidemia. Am J Clin Nutr 2005; 81:583-9.

CHAPTER 7

General Discussion

In recent years interest has increased to examine if foods rich in α-linolenic acid (ALA; C18:3n-3) are a good dietary source to increase plasma and tissue levels of EPA and DHA. ALA, which can be converted into the fish fatty acids EPA and DHA, is a plant-derived fatty acid that is present in a wide variety of products such as rapeseed oil, soybean oil, lineseed oil, nuts and nut oils and to a lesser degree in green leafy vegetables. The few studies that have estimated ALA conversion into EPA and DHA have suggested that conversion is limited [1-7]. However, estimates vary widely due to different experimental approaches that do not always mimic physiological situations. Furthermore, in some studies, the intake of ALA as well as its n-6 counterpart LA changed simultaneously, which inevitably also modified the ALA-to-LA ratio. As the enzymatic conversions of ALA and LA are interrelated, it is likely that a change in ALA intake modulates the n-3 conversion pathway differently from a change in LA intake or a change in their ratio.

The primary emphasis of the present thesis lies on the estimation of the *in vivo* conversion of dietary ALA in healthy humans. A stable isotope study was performed in which - for the first time - multiple oral tracer boluses of [U-^{13}C]ALA were given during a longer-term period of 9 days. A compartmental model was developed to quantify n-3 conversion, and to unravel the effects of a change in ALA, LA and their ratio on ALA metabolism. Because the mathematical model forms the cornerstone of the present work, we discuss our modeling framework, and its benefits and potential pitfalls against other modeling approaches that have been applied to date.

DEVELOPMENT OF A COMPARTMENTAL MODEL FOR ALA CONVERSION

At the time our experiment was performed, Pawlosky et al. published the first study in which a compartmental model was proposed to describe the conversion of ALA in human adults [2]. In that study, eight healthy subjects consumed a beef-based diet during 21 days. At the end of this dietary period, subjects received a single large oral bolus of 1 g deuterated alpha-linolenate (d5-18:3n-3 ethyl ester) dissolved in a low-fat yogurt. Subjects received also a breakfast and a lunch. Blood samples, both fasting and postprandial, were taken at 0, 8, 24, 48, 72, 96 and 168 hours after tracer intake, while the different n-3 fatty acid tracer concentrations were measured in total plasma lipids. The compartmental model of Pawlosky et al. consisted of 5 compartments: the first compartment represented isotope administration and gastrointestinal absorption,

whereas the other four compartments corresponded to the plasma total lipid pools of ALA, EPA, DPA, and DHA, respectively [2]. It was assumed that 98 % of the tracer bolus was absorbed and ended up in total plasma lipids. With this model, it was estimated that not more than 0.2 % of plasma ALA was used for EPA synthesis, whereas 63 % of plasma EPA was converted into DPA and 37 % of DPA was further converted into DHA. In view of the experimental differences, we had to develop another compartmental model. In contrast to the model developed by Pawlosky et al. [2], our model also made optimal use of the information available from both the labeled and unlabeled n-3 fatty acid data.

Briefly, a compartmental model is a mathematical construct which describes a set of time-varying tracer data and is based on the principle of mass balance. The set-up of our compartmental model consisted of several steps. First a model was developed using the averaged tracer data of the 29 subjects. With this tracer model, the transfer rate coefficients k(i,j) were determined. Transfer rate coefficients correspond to the fraction of a substrate that is transferred per unit of time from compartment j to i. Then a structurally identical tracee model was built and linked to the tracer model. The averaged tracee data of 29 subjects, the daily dietary ALA intake and the kinetic parameters derived from the tracer model were incorporated into the tracee model. Both the tracer and tracee model were then solved simultaneously. The main advantage of using averaged tracer and tracee data was that the noise in the data was minimized and a more reliable model could be developed. To implement the transfer rate coefficients on the tracee data to estimate tracee movements in the system, the tracee system has to be in a steady-state. During tracee steady-state, the differential equations, which describe the tracee fatty acid system, become algebraic equations. The latter can then be solved using the k(i,j) estimates from the tracer experiment. Using this approach, we found that approximately 7 % of dietary ALA was incorporated into plasma phospholipids and that almost all of the incorporated ALA was completely converted into EPA, but only marginally further into DHA. Furthermore, the main bottleneck within the n-3 pathway was the limited incorporation of dietary ALA into the plasma phospholipids pool rather than the delta-6 desaturation step. Our results did not agree with the results obtained by Pawlosky et al. [2]. This is, as will be discussed below, largely due to the differences in experimental approach.

CHOICE OF LIPID FRACTION AS THE MODELING FRAMEWORK

As is widely accepted, we assumed that the liver is the main and most significant site for conversion. Because it is not possible to determine *in vivo* n-3 fatty acid metabolism directly in the human liver, plasma phospholipids were chosen to reflect hepatic ALA

metabolism. Dietary ALA and most of the *de novo* synthesized long chain derivates will assemble in the phospholipids of the newly secreted lipoproteins. It was further assumed that, the estimation of ALA conversion based on the different n-3 fatty acids in plasma phospholipids will closely resemble the hepatic ALA conversion.

It might be argued that hepatic ALA conversion is better approximated when quantification is based on the n-3 fatty acids content of total plasma lipids or, alternatively, when estimated for each of the major lipid class components of total plasma lipids. However, we believe that it is more accurate to restrict the modeling framework to plasma phospholipids instead of expanding it to total plasma lipids. Total plasma lipids consist of free fatty acids, chylomicrons, cholesterylesters (CEs), triacylglycerol (TG) and phospholipids. The first three lipid fractions, however, are not suitable representatives to estimate hepatic ALA conversion. From the tracer studies by Burdge et al., for example, it is known that the plasma n-3 free fatty acid concentration is negligible [5, 6]. Furthermore, if chylomicrons contain any long-chain ^{13}C-labeled n-3 fatty acids at all, they are most likely obtained from conversion of the ALA tracer in the enterocyte and not from hepatic conversion. CEs that are synthesized in the liver represent hepatic conversion whereas those from intestinal or peripheral origin do not. In the latter situation, the n-3 fatty acids that are used for synthesis of CE are derived from phospholipids and as a result do not lead to other insights into ALA conversion. Actually, the n-3 fatty acids that are transferred from phospholipids to CEs are already part of the irreversible loss parameters leaving each n-3 compartment. Moreover, data from the study by Emken et al. showed that CEs are rather poor in n-3 LCPUFAs [1]. TG, on the other hand, could also reflect hepatic conversion. TGs are richer in ALA than plasma phospholipids, but just like CEs, contain less long-chain n-3 fatty acids. However, from our measurements we could not detect any ^{13}C-labeled n-3 LCPUFAs.

If total plasma lipids are used as a surrogate to model hepatic conversion of dietary ALA, the mass of the [^{13}C]ALA compartment would increase substantially. The increases in the masses of the EPA, DPA and DHA compartments, however, will be rather modest compared to that of ALA. Consequently, the incorporation of dietary ALA into the ALA compartment and the irreversible loss of ALA from that compartment will increase considerably whereas the transfer rate coefficient of ALA into the EPA compartment will decrease. Findings from the study by Pawlosky et al. provide an excellent illustration [2]. In that study, it was assumed that 98 % of dietary ALA would end up into the plasma total lipid ALA compartment pool. However, despite the large incorporation into the ALA compartment pool, only 0.2 % of this pool was estimated to be converted into EPA.

Additionally, caution should be taken how results are presented. Irrespective of the lipid fraction used, expressing conversions only as percentages of plasma pools might not be informative. To avoid misinterpretation, results should also be presented as the percentage or amount of dietary ALA that is converted.

FASTING VERSUS FASTING AND NON-FASTING SAMPLES

In contrast to the study by Pawlosky et al. [2], we deliberately chose to base the model on the outcomes of fasting blood samples only. In this way, we avoided mixing fasting and postprandial blood samples. In the latter case, a major part of labeled ALA is present in the chylomicron fraction. However, this ALA tracer is not yet available for hepatic metabolism, since chylomicrons have not passed the liver. Furthermore, if present at all, isotopically labeled EPA, DPA and DHA in chylomicrons can only be derived from intestinal conversion. In fact, Burdge et al. did detect labeled EPA and DPA within 2 hours after tracer intake in the TG fraction of chylomicrons, but they could not exclude a possible contamination of the chylomicron-rich fraction with VLDL [5]. Furthermore, ^{13}C-labeled ALA will account for nearly all labeled n-3 fatty acids present in chylomicrons. Therefore, adding the labeled n-3 fatty acid content of this lipid fraction to those of plasma phospholipids will increase the mass of the ALA compartment considerably, whereas it will hardly affect the compartmental masses of the other n-3 fatty acids. As a result, comparable effects on the estimates of kinetic parameters are expected when total lipids are used: the transfer rates for the incorporation and the irreversible loss from the ALA compartment will increase whereas the transfer rate describing the conversion from ALA to EPA will decrease.

SINGLE LARGE BOLUS VERSUS LONG TERM SMALL BOLUS INTAKE

Tracers have the important characteristics that they are detectable and distinguishable from their unlabeled analogues whereas their kinetic behavior is similar [8]. However, the latter property is only true when the tracer is provided in trace quantities. Large amounts of tracer intake might perturb the metabolic system and compromise tracee behavior. The prerequisite of administering minute tracer quantities was certainly not met in the study by Pawlosky et al. [2], since the 1000 mg deuterated alpha-linolenate ethyl ester (d5-C18:3n-3) was about 89 % of the daily dietary ALA consumption. Demmelmair et al. have indeed shown by using compartmental modeling that estimates for the conversion of LA into dihomo-γ-linoleic acid and arachidonic acid were higher after a fractionated intake than after one bolus of the same tracer quantity [9]. We therefore provided our subjects on the first day with a single bolus of 30 mg [U-^{13}C]ALA and for the next eight days a dose of 10 mg twice daily. In this way, daily tracer intake was only about 2.7 % and 1.8 % of total daily ALA intake, respectively. In addition, we administered the tracer for a longer-term according to a fractionated dosing schedule, as our aim was to mirror the effects of longer-term

supply on the conversion of ALA into EPA and DHA. With this approach, the tracer-tracee balance was not disrupted, while at the same time reliable estimates for DHA synthesis could be obtained. In an earlier study by Vermunt et al., it was shown that after a low dose of 45 mg [U-^{13}C]-labeled ALA enrichment of especially DHA increased slowly and marginally [10]. Thus, in addition to the amount of tracer intake, the scheduling of tracer administration might also have influenced the differences in the estimates of ALA conversion between our study and that of Pawlosky et al [2].

Effects of a change in dietary LA, ALA and their ratio

ALA and its n-6 counterpart LA compete for the same desaturation and elongation enzymes . Although ALA is the preferred substrate for the desaturase enzymes, LA has a competitive advantage because it is much more abundant in most diets than ALA [11-13]. Thus, changing the intake of ALA or LA might induce shifts in the synthesis of the longer chain fatty acids EPA and DHA. In addition, the ALA to LA ratio in the diet might affect conversion of dietary ALA independent of the absolute intakes of ALA and LA.

To date, the tracer study by Emken et al. is the only study that quantitatively examined the effect of an increased LA intake on the conversion of ALA, which was estimated by calculating the area under the curve (AUC) [1]. In this study, it was found that conversion of ALA decreased by 40 %: from 18.5 % after a saturated fatty acid rich diet (4.7 energy percent (En%) LA, 0.6 En% ALA, ALA to LA ratio of 1:8) to 11 % on a polyunsaturated fatty acid enriched diet (9.3 En% LA, 0.3 En% ALA, ALA to LA ratio of 1:30). This decrease in ALA conversion was completely ascribed to the increased LA intake. However, it might also have been caused by the simultaneous decrease in ALA intake or in the ALA to LA ratio.

Theoretically, ALA conversion may be increased by increasing the availability of ALA for the converting enzymes through a decrease in LA intake, an increase in ALA intake, or an increase in their ratio. Whether these dietary changes have quantitatively the same effects on n-3 fatty acid conversion is however not known. Our tracer study is the first to quantitatively unravel the effects of a change in the absolute amounts of ALA and LA and their ratio on the *in vivo* conversion of dietary ALA. We found that a limiting step in the conversion cascade of ALA is its incorporation into plasma phospholipids. Furthermore, not the ALA to LA ratio, but the amounts of ALA and LA in the diet determined n-3 fatty acid conversion. In fact, as can be seen in **Figure 1** and **Figure 2**, a decrease in LA intake has different effects on the absolute and relative conversion of dietary ALA than an increase in ALA intake. When the consumption of LA is decreased, the relative and absolute conversion of

dietary ALA into EPA is increased, whereas synthesis of DHA does not change. Increasing the intake of ALA, however, did not affect conversion of dietary ALA into EPA, whereas it did increase the absolute amount of DHA synthesized.

It should be emphasized that there is an apparent contradiction between the information derived from the n-3 fatty acid composition of plasma phospholipids and the findings obtained with the stable isotope study. As mentioned previously, based on the results of the tracer study, we concluded that not the ALA-to-LA ratio but the amounts of ALA and LA in the diet determine how much EPA and DHA are synthesized from dietary ALA. However, the n-3 fatty acid content of plasma phospholipids suggests exactly the opposite: not the dietary masses of ALA and LA are important but their ratio. For example, the EPA proportion in plasma phospholipids increased when subjects changed from the control diet with an ALA to LA ratio of 1:19 to a diet with a ratio of 1:6. Hence, regardless of whether the low LA diet or high ALA diet was consumed, the same ratio led to the same changes in the proportions of EPA in plasma phospholipids. In contrast, from the tracer conversion study we concluded that the conversion of dietary ALA to EPA increased on the low LA diet, but not on the high ALA diet. However, it should be noted that the EPA plasma phospholipid profile is a resultant of a continuous inflow of EPA fatty acids balanced by an outflow of EPA fatty acids. The inflow of EPA consists of dietary ALA that was consumed during the experimental period but also of dietary ALA and dietary EPA that were consumed before the study period. The latter were most likely released from endogenous sources such as for example fat tissue, lipid bilayers, or plasma lipid fractions. The outflow of EPA from the phospholipid pools might for example circulate in the body in other lipid fractions and return to plasma phospholipids as EPA at a later time point, might be directed towards storage pools or might be oxidized to CO_2. Thus, similar pool sizes (as measured under steady-state condition) may be the resultant from different kinetics (as measured with stable isotopes).

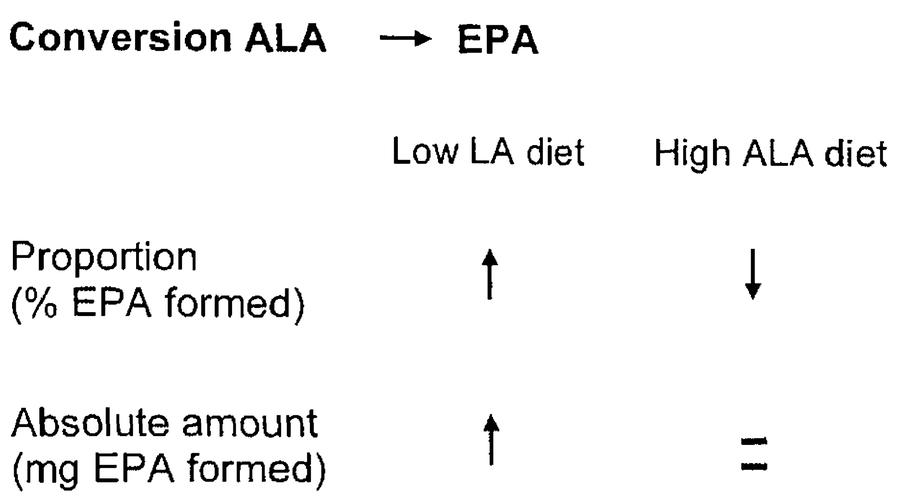

Figure 1
Overview of the effects of the low LA diet and high ALA diet on the synthesis of EPA from dietary ALA

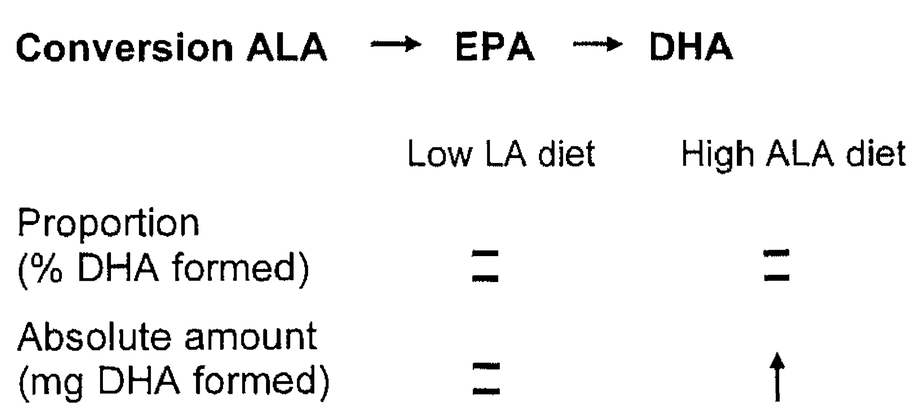

Figure 2
Overview of the effects of the low LA diet and high ALA diet on the synthesis of DHA from dietary ALA

Chapter 7

EFFECTS OF ALA AND FISH FATTY ACIDS ON CHD RISK MARKERS

As extensively reviewed [14-16], prospective studies suggest that marine n-3 LCPUFAs reduce the risk of coronary heart disease. Intervention studies have also suggested that these fatty acids lower cardiovascular risk [17, 18]. A recent meta-analysis however did not find any positive effects of fish oil fatty acids on overall mortality, combined cardiovascular events [19]. Although this meta-analysis has been criticized [20-22], it does show that effects of fish oil on cardiovascular risk are equivocal. Also the recent Study on Omega-3 Fatty acids and ventricular Arrhythmia (SOFA-trial) could not demonstrate positive effects of fish oil supplementation [23]. Interest in the cardioprotective effects of ALA rose after the results of the Lyon Heart Study [24, 25]. In this study, however, the experimental diet not only provided more ALA, but also more monounsaturated fatty acids and fibers from fruits, vegetables and cereals, whereas it contained less linoleic acid and saturated fatty acids [26]. This makes it impossible to draw any firm conclusions on the effects of ALA itself. Whatever the precise effects of n-3 fatty acids on cardiovascular risk are, the background of these possible effects is also not clear. In our studies, we mainly focused on the effects of these fatty acids on the serum lipoprotein profile.

Considering that the conversion of ALA into EPA and DHA is very limited, the effects of the fish fatty acids might differ from those of ALA. EPA and DHA have the characteristic to lower serum TG concentrations, while they may increase LDL cholesterol levels slightly, especially in hypertriacylglycerolemic subjects [27, 28]. In our study we could not detect a significant decrease in TG after an EPA/DHA intake of 1.6 g/day in elderly subjects. This is, however, not an uncommon finding for studies providing less than 2 g EPA/DHA daily [29]. The fish fatty acids did however increase LDL cholesterol concentrations compared to ALA. As expected, an increase in dietary ALA did not lower serum TG levels, compared to oleic acid. In another study, we compared the effect of ALA, LA and their ratio on serum lipids, lipoprotein concentrations, lipoprotein subclass distributions and particle sizes. We found that the ALA to LA ratio did not determine the serum lipid profile. Furthermore, in contrast to findings from other studies [30-34], ALA decreased LDL cholesterol significantly compared to oleic acid and LA, possibly through a decrease in small VLDL particles.

Findings from a few recent studies [35, 36] suggest that plant and marine n-3 fatty acids have comparable effects on blood coagulation and fibrinolytic factors. Our results agree with these findings as most markers of blood coagulation and fibrinolysis did not differ between the EPA/DHA enriched diet and the ALA enriched diet. Only an increase in TFPI activity was observed after an increased consumption of EPA/DHA. EPA/DHA, but not ALA, may also have beneficial effects on platelet aggregation when compared to oleic acid [37]. Markers for endothelium function however were affected

comparably. Thus, effects of n-3 fatty acids on serum lipoproteins and haemostatic function are too small to explain their potential positive effects on cardiovascular risk, when compared to other *cis*-unsaturated fatty acids.

CONCLUDING REMARKS AND RECOMMENDATIONS FOR FUTURE STUDIES

Our results show that in humans *in vivo* conversion of ALA is limited considering that less than 10 % of ALA in the diet is converted. Nearly all of this ALA is converted into EPA, but only marginally and slowly into DHA. Furthermore, the *in vivo* conversion of dietary ALA is not determined by the ALA to LA ratio of the diet, but by the separate amounts of these two fatty acids. Dietary ALA and LA have, however, different effects on ALA conversion. More specifically, a decrease in LA intake increases the synthesis of EPA, whereas an increase in ALA intake increases the synthesis of DHA. In apparently healthy, non-hypertriacylglycerolemic subjects, effects on the serum lipoprotein profile were comparable, although ALA unexpectedly decreased LDL cholesterol and apoB concentrations compared to LA.

It should be emphasized that our studies were not designed to define and propose optimal dietary intakes for LA, ALA and their LCPUFA derivates. However, our findings do indicate that the emphasis of dietary recommendations should be placed on the individual intakes of dietary ALA and LA and not on their ratio. A decrease in LA intake coupled to an increase in ALA intake is the most opportune approach to increase the synthesis of the fish fatty acids EPA and DHA from plant derived ALA. Conversion of the latter source will however not elevate the DHA plasma phospholipid levels as substantially as a moderate consumption of fish or marine oils will [11].
In fact, consumption of EPA and DHA remains the most efficient way to improve n-3 LCPUFA status [11].

The present work focused on the modulating effects of dietary ALA, LA and their ratio on the metabolism of dietary ALA and on its effects on serum lipids in healthy humans. It might be interesting to extend quantitative n-3 fatty acid conversion studies to other population groups, such as for example non-fish consuming vegetarian and vegan subjects, to examine whether their n-3 fatty acid conversion capacity differs from that of omnivore subjects. Vegetarian and vegan subjects have lower plasma n-3 fatty acid concentrations than omnivores [38]. Furthermore, the ALA content, and even more so the LA content is higher in vegetarian and vegan diets than in omnivore diets [38, 39]. Vegans and vegetarians are supposed to be optimal LCP synthesizers [12]. Perhaps they might benefit more form a change in the ALA and LA intake than omnivore subjects. Furthermore, Burdge et al. have recently proposed to consider

gender differences in the metabolism of n-3 fatty acids when defining dietary recommendations concerning the n-3 fatty acids [40]. Several studies have indeed suggested that premenopausal women have higher DHA levels than men of the same age group [5, 6, 41-43]. However, before gender specific dietary recommendations should actually be considered, more studies, that are specifically designed to determine quantitatively the effect of gender and reproductive status on ALA conversion, are warranted. It is now well established that conversion of ALA into EPA and in particularly into DHA is limited in humans. The underlying cause of the restricted LCPUFA synthesis is however unclear. Studies at the molecular level might also provide insight in ALA conversion. Furthermore it has been suggested that DHA synthesis from DPA is downregulated via feedback inhibition of the plasma DHA concentration in subjects following a fish based diet [3]. Studies could be performed to examine quantitatively the effect of a change in dietary n-3 LCPUFAs on the conversion of ALA. Further, it would be of interest to examine the contribution of other tissues to the conversion of ALA into its n-3 LCPUFAs. So far most quantitative studies have aimed to estimate hepatic conversion. However, desaturase expression has also been found in human brain, heart and long [44, 45], whereas studies with primates suggest that nervous tissue is also able to convert ALA [46]. Finally, it has recently been shown that there is a strong association between the fatty acid composition of serum phospholipids - among others ALA, EPA, DHA - and the variants of the human delta-5 and delta-6 desaturase gene clusters FASD1 and FASD2 [47]. If these gene clusters are indeed important for the conversion of ALA into EPA/DHA, then it would be interesting to see of these clusters are also related to diseases in which LCPUFA may play a role.

REFERENCES

1 Emken EA, Adlof RO, Gulley RM. Dietary linoleic acid influences desaturation and acylation of deuterium-labeled linoleic and linolenic acids in young adult males. Biochim Biophys Acta 1994; 1213:277-88.

2 Pawlosky RJ, Hibbeln JR, Novotny JA, Salem N, Jr. Physiological compartmental analysis of alpha-linolenic acid metabolism in adult humans. J Lipid Res 2001; 42:1257-65.

3 Pawlosky RJ, Hibbeln JR, Lin Y, Goodson S, Riggs P, Sebring N, Brown GL, Salem N, Jr. Effects of beef- and fish-based diets on the kinetics of n-3 fatty acid metabolism in human subjects. Am J Clin Nutr 2003; 77:565-72.

4 Hussein N, Ah-Sing E, Wilkinson P, Leach C, Griffin BA, Millward DJ. Long-chain conversion of [^{13}C]linoleic acid and alpha-linolenic acid in response to marked changes in their dietary intake in men. J Lipid Res 2005; 46:269-80.

5 Burdge GC, Jones AE, Wootton SA. Eicosapentaenoic and docosapentaenoic acids are the principal products of alpha-linolenic acid metabolism in young men*. Br J Nutr 2002; 88:355-63.

6 Burdge GC, Wootton SA. Conversion of alpha-linolenic acid to eicosapentaenoic, docosapentaenoic and docosahexaenoic acids in young women. Br J Nutr 2002; 88:411-20.

7 Burdge GC, Finnegan YE, Minihane AM, Williams CM, Wootton SA. Effect of altered dietary n-3 fatty acid intake upon plasma lipid fatty acid composition, conversion of [^{13}C]alpha-linolenic acid to longerchain fatty acids and partitioning towards beta-oxidation in older men. Br J Nutr 2003; 90:311-21.

8 Cobelli C, Foster D, Toffolo G. Tracer kinetics in biomedical research: from data to model. New York, N.Y.: Kluwer Academic/Plenum Publishers, 2000.

9 Demmelmair H, Iser B, Rauh-Pfeiffer A, Koletzko B. Comparison of bolus versus fractionated oral applications of [^{13}C]-linoleic acid in humans. Eur J Clin Invest 1999; 29:603-9.

10 Vermunt SH, Mensink RP, Simonis MM, Hornstra G. Effects of dietary alpha-linolenic acid on the conversion and oxidation of ^{13}C-alpha-linolenic acid. Lipids 2000; 35:137-42.

11 Brenna JT. Efficiency of conversion of alpha-linolenic acid to long chain n-3 fatty acids in man. Curr Opin Clin Nutr Metab Care 2002; 5:127-32.

12 Sinclair AJ, Attar-Bashi NM, Li D. What is the role of alpha-linolenic acid for mammals? Lipids 2002; 37:1113-23.

13 Gerster H. Can adults adequately convert alpha-linolenic acid (18:3n-3) to eicosapentaenoic acid (20:5n-3) and docosahexaenoic acid (22:6n-3)? Int J Vitam Nutr Res 1998; 68:159-73.

14 Breslow JL. n-3 fatty acids and cardiovascular disease. Am J Clin Nutr 2006; 83:1477S-1482S.

15 Gebauer SK, Psota TL, Harris WS, Kris-Etherton PM. n-3 fatty acid dietary recommendations and food sources to achieve essentiality and cardiovascular benefits. Am J Clin Nutr 2006; 83:1526S-1535S.

16 Wijendran V, Hayes KC. Dietary n-6 and n-3 fatty acid balance and cardiovascular health. Annu Rev Nutr 2004; 24:597-615.

17 GISSI-Prevenzione-Investigators. Dietary supplementation with n-3 polyunsaturated fatty acids and vitamin E after myocardial infarction: results of the GISSI-Prevenzione trial. Gruppo Italiano per lo Studio della Sopravvivenza nell'Infarto miocardico. Lancet 1999; 354:447-55.

18 Burr ML, Fehily AM, Gilbert JF, Rogers S, Holliday RM, Sweetnam PM, Elwood PC, Deadman NM. Effects of changes in fat, fish, and fibre intakes on death and myocardial reinfarction: diet and reinfarction trial (DART). Lancet 1989; 2:757-61.

19 Hooper L, Thompson RL, Harrison RA, Summerbell CD, Ness AR, Moore HJ, Worthington HV, Durrington PN, Higgins JP, Capps NE, Riemersma RA, Ebrahim SB, Davey Smith G. Risks and benefits of omega 3 fats for mortality, cardiovascular disease, and cancer: systematic review. BMJ 2006; 332:752-60.

20 Geleijnse JM, Brouwer IA, Feskens EJ. Risks and benefits of omega 3 fats: health benefits of omega 3 fats are in doubt. BMJ 2006; 332:915; discussion 915-6.

21 He K, Song Y. Risks and benefits of omega 3 fats: a few thoughts on systematic review. BMJ 2006; 332:915; discussion 915-6.

22 Brunner E. Oily fish and omega 3 fat supplements. BMJ 2006; 332:739-40.

23 Brouwer IA, Zock PL, Camm AJ, Bocker D, Hauer RN, Wever EF, Dullemeijer C, Ronden JE, Katan MB, Lubinski A, Buschler H, Schouten EG. Effect of fish oil on ventricular tachyarrhythmia and death in patients with implantable cardioverter defibrillators: the Study on Omega-3 Fatty Acids and Ventricular Arrhythmia (SOFA) randomized trial. JAMA 2006; 295:2613-9.

24 de Lorgeril M, Renaud S, Mamelle N, Salen P, Martin JL, Monjaud I, Guidollet J, Touboul P, Delaye J. Mediterranean alpha-linolenic acid-rich diet in secondary prevention of coronary heart disease. Lancet 1994; 343:1454-9.

25 de Lorgeril M, Salen P, Martin JL, Monjaud I, Delaye J, Mamelle N. Mediterranean diet, traditional risk factors, and the rate of cardiovascular complications after myocardial infarction: final report of the Lyon Diet Heart Study. Circulation 1999; 99:779-85.

26 Sanderson P, Finnegan YE, Williams CM, Calder PC, Burdge GC, Wootton SA, Griffin BA, Joe Millward D, Pegge NC, Bemelmans WJ. UK Food Standards Agency alpha-linolenic acid workshop report. Br J Nutr 2002; 88:573-9.

27 Harris WS. Fish oils and plasma lipid and lipoprotein metabolism in humans: a critical review. J Lipid Res 1989; 30:785-807.

28 Harris WS. n-3 fatty acids and serum lipoproteins: human studies. Am J Clin Nutr 1997; 65:1645S-1654S.

29 Harris WS. Omega-3 long-chain PUFA and triglyceride lowering: minimum effective intakes. Eur Heart J Supplements 2001; 3:D59-D61.

30 Kelley DS, Nelson GJ, Love JE, Branch LB, Taylor PC, Schmidt PC, Mackey BE, Iacono JM. Dietary alpha-linolenic acid alters tissue fatty acid composition, but not blood lipids, lipoproteins or coagulation status in humans. Lipids 1993; 28:533-7.

31 Mantzioris E, James MJ, Gibson RA, Cleland LG. Dietary substitution with an alpha-linolenic acid-rich vegetable oil increases eicosapentaenoic acid concentrations in tissues. Am J Clin Nutr 1994; 59:1304-9.
32 Pang D, Allman-Farinelli MA, Wong T, Barnes R, Kingham KM. Replacement of linoleic acid with alpha-linolenic acid does not alter blood lipids in normolipidaemic men. Br J Nutr 1998; 80:163-7.
33 Valsta LM, Jauhiainen M, Aro A, Salminen I, Mutanen M. The effects on serum lipoprotein levels of two monounsaturated fat rich diets differing in their linoleic and a-linolenic acid contents. Nutr Metab Cardiovasc Dis 1995; 5:129-140.
34 Bemelmans WJ, Broer J, Feskens EJ, Smit AJ, Muskiet FA, Lefrandt JD, Bom VJ, May JF, Meyboom-de Jong B. Effect of an increased intake of alpha-linolenic acid and group nutritional education on cardiovascular risk factors: the Mediterranean Alpha-linolenic Enriched Groningen Dietary Intervention (MARGARIN) study. Am J Clin Nutr 2002; 75:221-7.
35 Freese R, Mutanen M. Alpha-linolenic acid and marine long-chain n-3 fatty acids differ only slightly in their effects on hemostatic factors in healthy subjects. Am J Clin Nutr 1997; 66:591-8.
36 Finnegan YE, Howarth D, Minihane AM, Kew S, Miller GJ, Calder PC, Williams CM. Plant and marine derived (n-3) polyunsaturated fatty acids do not affect blood coagulation and fibrinolytic factors in moderately hyperlipidemic humans. J Nutr 2003; 133:2210-3.
37 Wensing AG, Mensink RP, Hornstra G. Effects of dietary n-3 polyunsaturated fatty acids from plant and marine origin on platelet aggregation in healthy elderly subjects. Br J Nutr 1999; 82:183-91.
38 Rosell MS, Lloyd-Wright Z, Appleby PN, Sanders TA, Allen NE, Key TJ. Long-chain n-3 polyunsaturated fatty acids in plasma in British meat-eating, vegetarian, and vegan men. Am J Clin Nutr 2005; 82:327-34.
39 Davis BC, Kris-Etherton PM. Achieving optimal essential fatty acid status in vegetarians: current knowledge and practical implications. Am J Clin Nutr 2003; 78:640S-646S.
40 Burdge GC. Metabolism of alpha-linolenic acid in humans. Prostaglandins Leukot Essent Fatty Acids 2006.
41 Giltay EJ, Gooren LJ, Toorians AW, Katan MB, Zock PL. Docosahexaenoic acid concentrations are higher in women than in men because of estrogenic effects. Am J Clin Nutr 2004; 80:1167-74.
42 Giltay EJ, Duschek EJ, Katan MB, Zock PL, Neele SJ, Netelenbos JC. Raloxifene and hormone replacement therapy increase arachidonic acid and docosahexaenoic acid levels in postmenopausal women. J Endocrinol 2004; 182:399-408.
43 Pawlosky R, Hibbeln J, Lin Y, Salem N, Jr. n-3 fatty acid metabolism in women. Br J Nutr 2003; 90:993-4; discussion 994-5.
44 Cho HP, Nakamura M, Clarke SD. Cloning, expression, and fatty acid regulation of the human delta-5 desaturase. J Biol Chem 1999; 274:37335-9.
45 Cho HP, Nakamura MT, Clarke SD. Cloning, expression, and nutritional regulation of the mammalian Delta-6 desaturase. J Biol Chem 1999; 274:471-7.
46 Su HM, Huang MC, Saad NM, Nathanielsz PW, Brenna JT. Fetal baboons convert 18:3n-3 to 22:6n-3 in vivo. A stable isotope tracer study. J Lipid Res 2001; 42:581-6.
47 Schaeffer L, Gohlke H, Muller M, Heid IM, Palmer LJ, Kompauer I, Demmelmair H, Illig T, Koletzko B, Heinrich J. Common genetic variants of the FADS1 FADS2 gene cluster and their reconstructed haplotypes are associated with the fatty acid composition in phospholipids. Hum Mol Genet 2006; 15:1745-56.

Summary

Samenvatting

Summary

α-Linolenic acid (ALA, C18:3n-3) is a fatty acid of the n-3 fatty family. It is called essential because humans cannot synthesize it *de novo*, despite that it is vital for their health. Once ingested, ALA can be converted into longer and more unsaturated fatty acids such as eicosapentaenoic acid (EPA, C20:5n3) and docosahexaenoic acid (DHA, C22:6n-3). EPA and DHA are also known as fish fatty acids, as they are mainly present in fatty fish and fish oil. Over the years, interest in EPA and DHA has increased, because of their postulated beneficial effects on a wide variety of health parameters such as cardiovascular risk. Despite all efforts, consumption of these marine fatty acids remains below dietary recommendations. However, because ALA is the precursor for EPA and DHA synthesis and because it is easily available from plant derived sources, an increased ALA intake might be helpful to increase the EPA and DHA status of the body. To resolve whether dietary ALA is a suitable alternative for the marine fatty acids, it is necessary to have a quantitative understanding of its metabolic pathways. The extent of dietary ALA conversion appears to be very low. However, most studies only allowed a qualitative or semi-quantitative description of ALA conversion. Despite that quantification remains complex, it is possible to quantify the *in vivo* conversion of ALA in humans using stable isotopes and compartmental modeling. Furthermore, the conversion of ALA may depend on the intake of linoleic acid (C18:2n6; LA), which might complicate estimation of dietary ALA conversion even more. ALA and LA share the same converting enzymes. Therefore, conversion of dietary ALA might be increased in three distinct ways: through an increase of ALA intake, via a decrease in LA consumption, or by increasing the ratio in the diet. So far, the outcome of each separate approach has not been quantitatively assessed in humans.

To estimate hepatic *in vivo* conversion of dietary ALA, 29 subjects (14 men and 15 women) followed for 4 weeks a diet providing 7 % of energy from LA and 0.4 % from ALA. On day 19, subjects received a single tracer bolus of 30 mg uniformly labeled [^{13}C]ALA and for the following 8 days 10 mg twice daily. Fasting plasma phospholipid concentrations of ^{12}C- and ^{13}C-labeled ALA, EPA, docosapentaenoic acid (DPA; C22:5n-3), and DHA were determined on days 19, 21, 23, 26, 27, and 28. Conversion of ALA into its longer-chain polyunsaturated fatty acids was estimated by compartmental modeling. To this end, a tracer model was developed based on the averaged ^{13}C-labeled fatty acid data of the participants. A similar tracee model was set up, which contained the averaged ^{12}C-labeled fatty acid data, the mean daily ALA intake, and the kinetic parameters derived from the tracer model. Both models were solved simultaneously to estimate the incorporation of dietary ALA into plasma phospholipids and its subsequent conversion into its LCPUFAs. It was estimated that 7 % of dietary ALA was incorporated into plasma phospholipids. Nearly all of this ALA pool was converted into EPA and 1 % of the EPA plasma phospholipid pool, which

corresponds to 0.07 % of dietary ALA intake, was converted into DPA and subsequently into DHA. The limited conversion of ALA-derived EPA into DPA might therefore be an obstacle for DHA synthesis.

After these 4 weeks, subjects received for 6 weeks one of the 3 experimental diets to examine whether ALA metabolism is influenced by the intakes of ALA, LA or their ratio. Nine subjects continued to consume the control diet, ten subjects received a low LA diet (3 En% LA, 0.4 En% ALA, ratio = 1:7), and ten subjects a high ALA diet (7 En% LA, 1.1 En% ALA, ratio = 1:7). Ten days before the end of this experimental period, subjects were provided with oral boluses of [U-^{13}C]-ALA during 9 days and breath was sampled during the first 9 hours to estimate oxidation of [U-^{13}C]ALA. Conversion of ALA was estimated using compartmental modeling of the individual ^{13}C- and ^{12}C n-3 fatty acid concentrations in fasting plasma phospholipids obtained during run-in and the experimental periods. We found that the incorporation of ALA into plasma phospholipids increased by 3.6 % in the low LA group and decreased by 8.0 % in the high ALA group. In absolute amounts, it increased by 34.3 mg in the low LA group, but did not change significantly in the High ALA group. Nearly all ALA from the plasma phospholipid pool was converted into EPA. In the 3 groups, conversion of EPA into DPA and DHA hardly changed and was < 0.1 % of dietary ALA. In absolute amounts, synthesis of DHA was unchanged in the low LA group, whereas it increased from 0.7 to 1.9 mg in the high ALA group. The dietary interventions did not change the oxidation of ALA. Our results suggest that the amounts of ALA and LA in the diet - but not their ratio - determine ALA conversion.

Determinants of the *in vivo* metabolism of ALA in humans are poorly understood. We therefore explored whether ALA conversion and oxidation are related to gender, age, basal metabolic rate, body composition, and the proportion of linoleic acid and *trans* fatty acids in plasma phospholipids. The conversion of dietary ALA into EPA was positively associated with age and percentage fat mass, while the conversion of EPA into DHA was negatively associated with the proportion of LA in plasma phospholipids. In our study, we did not find an association between gender or reproductive status with the conversion and oxidation of dietary ALA.

Aside from its role as a precursor for the synthesis of the marine fatty acids, ALA might have beneficial effects on cardiovascular risk markers. A sparse number of studies have suggested that ALA has similar effects on serum lipid levels as its n-6 fatty acid analog LA, but an effect of a change in the ALA:LA ratio cannot be excluded. Furthermore, the effects of ALA, LA and their ratio on lipoprotein subclass distributions are unknown. Finally, we have compared side-by-side the effects of ALA with those of EPA/DHA on cardiovascular risk markers in elderly subjects aged between 60 - 78 y. We found that the ALA to LA ratio did not determine the serum lipid profile. In addition, ALA decreased LDL cholesterol significantly compared to oleic acid and LA, possibly through a decrease in small VLDL particles. In healthy elderly subjects, ALA affected concentrations of LDL cholesterol and apoB more favorably than

EPA/DHA did. Furthermore, our findings suggested, that ALA and its long chain derivatives have comparable effects on markers of blood coagulation, fibrinolysis, and endothelium function.

In conclusion, *in vivo* conversion of dietary ALA in humans is less than 10 %. Conversion depends on the amounts of ALA and LA in the diet, but not on their ratio. However, ALA and LA affect ALA conversion differently, as an increased LA intake increased EPA synthesis, while DHA synthesis increased after an increased ALA intake. ALA and the marine n-3 fatty acids had comparable effects on markers of blood coagulation, fibrinolysis and endothelium function. Except for an unexpected decrease in LDL cholesterol and apoB concentrations, ALA affects serum lipid concentrations and lipoprotein profile comparably to LA in healthy non-hypertriacylglycerolemic individuals. The serum lipid concentrations and lipoprotein subclass distributions are not affected by the ALA:LA ratio.

α-Linoleenzuur (ALA; C18:3n-3) is een vetzuur dat behoort tot de n-3 vetzuur familie. ALA wordt een essentieel vetzuur genoemd omdat het noodzakelijk is voor de gezondheid terwijl het menselijk lichaam het niet zelf kan produceren. Na opname via de voeding kan ALA worden omgezet in langere en meer onverzadigde vetzuren, zoals eicosapentaeenzuur (EPA; C20:5n-3) en docosahexaeenzuur (DHA; C22:6n-3). EPA en DHA staan ook bekend als de zogenaamde visvetzuren, omdat ze voornamelijk aanwezig zijn in vette vis en visolie. De interesse voor EPA en DHA is groot, vanwege hun veronderstelde gunstige effecten op een groot aantal gezondheidsparameters zoals het verlagen van het risico op hart- en vaatziekten. Ondanks alle inspanningen om de consumptie van visvetzuren te verhogen, blijft de consumptie van deze visvetzuren vaak lager dan aanbevolen. Een verhoogde ALA-inname kan mogelijk helpen bij het toenemen van de hoeveelheid EPA en DHA in het lichaam, omdat ALA kan worden gebruikt voor de synthese van EPA en DHA en het gemakkelijk te verkrijgen is uit plantaardige bronnen. Om na te gaan of ALA uit de voeding een geschikt alternatief is voor de consumptie van visvetzuren, is het nodig om te weten hoeveel ALA uiteindelijk wordt omgezet in EPA en DHA. Uit eerdere studies is gebleken dat deze omzetting beperkt is. In de meeste studies echter, is deze omzetting niet gekwantificeerd. Hoewel moeilijk, is het mogelijk om de omzetting van ALA in mensen te kwantificeren met behulp van stabiele isotopen en modellering. Daarbij dient rekening te worden gehouden met het feit dat de omzetting van ALA waarschijnlijk afhankelijk is van de linolzuurinname (C18:2n6; LA), omdat ALA en LA dezelfde omzettingsenzymen delen. Theoretisch kan de conversie van voeding-ALA dan ook op drie manieren worden verhoogd: door een toename in ALA-inname, door een daling in LA-consumptie, of door het verhogen van de ALA:LA-verhouding in de voeding. Deze drie mogelijkheden om de omzetting van ALA te verhogen zijn tot op heden nog niet met elkaar vergeleken.

Om de conversie van ALA door de lever (het belangrijkste orgaan voor de omzetting van ALA) te schatten, volgden 29 personen (14 mannen, 15 vrouwen) gedurende 4 weken een voeding, die 7 energie procent (En%) LA en 0.4 En% ALA bevatte. Op dag 19 kregen de personen 30 mg uniform gelabeld [^{13}C]ALA en gedurende de volgende 8 dagen tweemaal per dag 10 mg. Plasma fosfolipiden concentraties van ^{12}C en ^{13}C gelabeld ALA, EPA, DPA (C22:5n-3) en DHA werden bepaald op dag 19, 21, 23, 26, 27, en 28 bij de proefpersonen. De omzetting van ALA in de lange keten onverzadigde vetzuren (EPA, DPA en DHA) werd geschat door modellering. Hiervoor werd een tracer model ontwikkeld, op basis van de gemiddelde ^{13}C gelabelde vetzuur data van de deelnemers. Er werd een vergelijkbaar tracee model opgesteld dat gebruik maakte van de gemiddelde ^{12}C gelabelde vetzuur data, de gemiddelde ALA inname en de kinetische parameters uit het tracer model. Beide modellen werden gelijktijdig opgelost om de inbouw van voeding-ALA in de plasma fosfolipiden en de

daaropvolgende conversie in zijn lange keten vetzuren te schatten. Het bleek dat 7 % van het voeding-ALA werd ingebouwd in de fosfolipiden. Dit ALA werd vervolgens grotendeels omgezet in EPA. Slechts 1 % van het EPA werd omgezet in DPA en vervolgens in DHA. Dit komt overeen met 0.07 % van de ALA inname. De beperkte omzetting van het uit ALA verkregen EPA naar DPA, is dus een verklaring voor de zeer lage DHA synthese uit voeding-ALA.

Na deze 4 weken kregen de personen gedurende 6 weken, 1 van de 3 experimentele voedingen om na te gaan of de omzetting van ALA kan worden beïnvloed door de inname van ALA, LA of hun ratio te veranderen. Negen personen bleven de controle voeding consumeren, 10 personen kregen een lage LA-voeding (3 En% LA, 0.4 En% ALA, ratio = 1:7), en 10 personen een hoge ALA-voeding (7 En% LA, 1.1 En% ALA, ratio = 1:7). Tien dagen voor het einde van deze experimentele periode werd wederom met behulp van stabiele isotopen de omzetting van ALA gemeten. Tevens werd gedurende 9 uur uitademinglucht verzameld om de oxidatie van [U-^{13}C]ALA te schatten. De conversie van ALA werd geschat door middel van modellering van de individuele ^{13}C en ^{12}C n-3 vetzuur concentraties van de nuchtere plasma fosfolipiden. We constateerden dat de inbouw van ALA in de plasma fosfolipiden toenam met 3.6 % in de lage LA-groep, maar afnam met 8 % in de hoge ALA-groep. Als deze percentages echter werden omgerekend naar absolute waarden, dan werd er in de lage LA-groep 0.34 mg meer ALA uit de voeding omgezet in EPA, terwijl de omzetting in de hoge ALA-groep niet veranderde. Het ALA uit de plasma fosfolipiden werd bijna volledig omgezet in EPA. De omzetting van EPA in DPA en daaropvolgend in DHA veranderde nauwelijks in de 3 groepen en was minder dan 0.1 % van het voedings-ALA. In absolute waarden was de synthese van DHA onveranderd in de lage LA-groep, terwijl deze toenam van 0.7 tot 1.9 mg in de hoge ALA-groep. De voedingsinterventies hadden geen effect op de ALA-oxidatie. Deze resultaten laten zien dat de hoeveelheid ALA en LA in de voeding - maar niet hun ratio - de omzetting van ALA bepalen.

Er is weinig bekend over de determinanten van de omzetting en oxidatie van ALA door de mens. Daarom zijn we nagegaan of de ALA conversie en oxidatie zijn gerelateerd aan geslacht, pre- en postmenopauzale status, leeftijd, basaal metabolisme, lichaamssamenstelling, en het percentage linolzuur en trans vetzuren in plasma fosfolipiden. De omzetting van ALA naar EPA was positief gerelateerd aan leeftijd en het percentage vetmassa, terwijl de omzetting van EPA in DHA negatief gerelateerd was aan het percentage LA in plasma fosfolipiden. Er werd geen verband gevonden tussen tussen geslacht of de pre- en postmenopauzale status en de omzetting of oxidatie van ALA uit de voeding.

Behalve voor de vorming van EPA en DHA, kan ALA zelf ook gunstige effecten hebben op cardiovasculaire risico markers. Een beperkt aantal studies hebben gesuggereerd dat ALA vergelijkbare effecten heeft op de serum lipidenwaarden als zijn n-6 vetzuur analoog LA. Echter, een effect van een verandering in de ALA:LA ratio kon

niet worden uitgesloten. Bovendien zijn de effecten van ALA, LA en hun ratio op de grootte van de lipoproteïnen deeltjes onbekend. Tot slot hebben we in een voedingsinterventiestudie van 9 weken, de effecten van ALA vergeleken met die van EPA/DHA op de cardiovasculaire risico markers bij oudere personen tussen 60 - 78 jaar. We vonden dat de ALA:LA ratio het serum lipidenprofiel niet veranderde. Verder verminderde ALA het LDL cholesterol significant in vergelijking met oliezuur en LA. Dit kwam mogelijk door een daling in het aantal kleine VLDL deeltjes. Bij gezonde oudere personen beïnvloedde ALA de LDL-cholesterolconcentraties en apoB gunstig in vergelijking met EPA/DHA. Onze bevindingen suggereerden verder, dat ALA en EPA/DHA vergelijkbare effecten hebben op de markers van bloedstolling, fibrinolyse en vaatwandfunctie.

Op basis van deze bevindingen concluderen wij dat de omzetting van ALA uit de voeding in EPA beperkt is en minder dan 10 % bedraagt. Deze omzetting wordt bepaald door de hoeveelheden ALA en LA in de voeding, maar niet door de ALA:LA verhouding. Een toegenomen LA inname verhoogde de EPA synthese, terwijl de DHA synthese toenam na een verhoogde ALA-inname. Verder hadden in de 9-weekse interventiestudie ALA en de visvetzuren vergelijkbare effecten op markers voor de bloedstolling en fibronolyse en vaatwandfunctie. Behalve een onverwachte daling in LDL-cholesterol en apoB concentraties, zijn de effecten van ALA en LA op de serum lipidenconcentraties en het lipoproteïnenprofiel vergelijkbaar. Een laatste conclusie is dat de effecten op het serum lipoproteïnenprofiel niet worden bepaald door de ALA:LA ratio.

Dankwoord

Dankwoord

Professor Ronald Mensink, beste Ronald, ik wil je danken voor je nuchtere en heldere kijk, je relativeringsvermogen, je zin voor humor, je opbouwende opmerkingen en suggesties bij alle stappen in het tot stand komen van dit proefschrift. Je hebt me steeds de ruimte gegeven om open en eerlijk mijn mening te geven en mezelf te zijn. Je hebt altijd een groot vertrouwen in me gehad. Ik apprecieer je bovenal om je persoonlijkheid en menselijkheid.

Het WCFS wil ik danken voor de financiële ondersteuning waardoor we de dure stabiele isotopen studie hebben kunnen uitvoeren en ik op werkbezoek kon gaan naar Padua en Seattle. In het bijzonder wil ik prof. Martijn Katan en dr. Peter Zock danken voor hun tijd en wetenschappelijke expertise bij het kritisch doorlezen van de stabiele isotopen manuscripten.

I would like to acknowledge the assistance of prof. Claudio Cobelli, prof. David Foster, dr. Mary Spilker, prof. Gianna Toffolo, and prof. Paolo Vicini. Dear Gianna and Claudio, thank you for introducing me in the field of compartmental modeling, and for your help during the initial phase of model development. You have always made me feel very welcome at your department. Dear Paolo, thank you for all the help and letting me stay at your lab. Dear David, dear Mary without your help there would not have been a compartmental model in the first place. I am grateful for all your advise, efforts and involvement, and for the critical reading of the manuscript.

Ik dank de beoordelingscommissie bestaande uit prof. dr. K. R. Westerterp, dr. E. E. Blaak, prof. dr. R.-J. M. Brummer, prof. dr. E. G. Schouten and prof. dr. E. A. Trautwein voor het lezen en beoordelen van het proefschrift.

Frank, Sjoerd en Hasibe wil ik danken voor de labanalyses die in dit proefschrift beschreven staan. Anita en Annemie dank ik voor de stabiele isotopen bepalingen. Mandy, dank je voor de praktische hulp bij het uitvoeren van de experimenten. Loek en Paul, ik dank jullie voor alle computer gerelateerde hulp.

Jos en Luc, jullie waren mijn kamergenoten van het eerste uur. Jos, ik heb je graag omdat je een eerlijke, gemoedelijke en gezellige persoon bent, die altijd bereid is om te helpen en mensen neemt zoals ze zijn. Ik heb me bij jou altijd goed gevoeld. Luc, ik heb je graag omwille van je humor, je eerlijkheid, je hulpvaardigheid, omdat je altijd jezelf blijft en recht door zee bent. Lieve Jos en Luc, ik ben blij en fier dat jullie beiden naast mij staan als paranimf.

Ilse, door jou heb ik me snel thuis gevoeld en heb ik mijn draai gevonden bij HB. Je hebt me vaak geholpen bij experimenten, als collega en als proefpersoon. De periode dat je bij HB werkte heb ik ervaren als de vrolijkste periode.

Larissa, Claudia en Ilona, jullie vormen het centrale punt van HB. Het is ongelooflijk hoeveel rollen jullie, elk op een eigen specifieke manier, kunnen vervullen.

Jullie waren nu eens het bureau van informatie, dan weer klachten- en ombudsdienst en soms het departement van gediplomeerde psychologen. Ik wil jullie danken voor de integere, vrolijke en vriendschappelijke wijze van onthaal.

Herman, je bent een van mijn beste vrienden. Er gaat geen dag voorbij, of je doet iets of zegt iets waardoor ik me weer bewust wordt waarom we vrienden zijn. Dat is voor zolang ik me herinner altijd al het geval geweest. Ik ben erg blij dat we collega's en kamergenoten zijn geweest.

Gabby, je bent een van de meest collegiale personen die ik ken. Als collega wil ik je danken voor de talloze keren dat je me te hulp bent geschoten tijdens de experimenten. In de loop van bijna 7 jaar heb je als vriendin veel voor me betekend tijdens de kleine en grote momenten van verdriet, frustratie en plezier.

Mandy, Johan, Kristof, Elke, Ilse, Ruth, Annemie, Anita, Guy, Kaatje, Kristel, Kirsten, Martine en Stan, ik heb genoten van onze gezellige Belgische babbels. Mario, ik dank je voor alle hulp en vooral voor je vriendschap. Wendy S., Ralph, Uriëll, Anneke, Myriam T., Elke N., Ron, Sjoerd, Tanja A., Chris, Joost, Eefje, Tanja H. en René dank ik voor alle vrolijke, gezellige, eerlijke en vertrouwelijke gesprekken. Alle collega's en oud-collega's die ik niet genoemd heb dank ik voor de fijne werksfeer.

Jos, ik ben je veel dank verschuldigd voor de PC ondersteuning. Bovenal dank ik je voor je hulp, goede raad en je constante betrokkenheid. Lidja, Rob, Suzie, Dries, Sara, Mariette, Lizette, Claudia en Peter wil ik danken voor de interesse en het meeleven bij alle fijne en minder fijne gebeurtenissen.

Lieve moekie, ik vind geen woorden om te zeggen wat je voor mij betekent en hoe dankbaar ik je ben. Je weet als geen ander hoe fijn, maar ook hoe zwaar de afgelopen jaren zijn geweest. Dat ik er op mijn promotiedag mag staan heb ik te danken aan je onvoorwaardelijke steun, je hulp en je vertrouwen. Ik heb je lief.

Als laatste wil ik mijn grootouders vernoemen, Rozalia Ostafin en Jozef Kekus, die beiden wel de capaciteiten, maar niet de mogelijkheden hebben gehad die mij wel ter beschikking stonden. Ik dank ze voor de waarden en normen die ze ons hebben meegegeven. Aan jullie wil ik dit proefschrift opdragen.

Curriculum Vitae

Curriculum Vitae

Petra Lydia Louisa Goyens was born in Genk, Belgium, on January 17, 1972. She completed her secondary education at the O.-L.-Vrouwlyceum in Genk in 1990. In 1995 she obtained her Bachelor of Science degree in Nutrition and Dietetics at the Rega School in Leuven, Belgium. In the same year she started her Master of Science study in Biological Health Sciences at the Faculty of Health Sciences at Maastricht University in The Netherlands. She did a major internship at the Department of Movement Sciences of Maastricht University and a minor internship at the Department of Nematology at Wageningen University.

After graduating in 1998 she started her Masters of Science in Biostatistics at the Limburgs Universitair Centrum, Belgium, which she completed in 2002. She was appointed as PhD student at the Department of Human Biology, Maastricht University, The Netherlands until 2004. In December 2001, she obtained her license to conduct animal experiments. In May 2002 she visited the lab of prof. Claudio Cobelli and prof. Gianna Toffolo at the Department of Information Engineering, University of Padova, Italy to professionalize within the field of kinetic modeling of stable isotope data. In September 2002, she visited the Department of Bioengineering at the University of Washington, Seattle to quantify α-linolenic acid conversion using compartmental modeling with SAAM II under supervision of prof. David M. Foster and dr. Mary E. Spilker. From 2004 she continued as a Postdoctoral Research Fellow at the department of Human Biology. This 18-month Fellowship was part of the EU project SEAFOODplus of the 6th Framework Program for Research. Thereafter, she was employed within the European 6th Framework multi-center trials DioGenes and LipGene.

Publications

FULL PAPERS

Borghouts L. B., Wagenmakers A. J., Goyens P. L. L., and Keizer H. A. Substrate utilization in non-obese Type II diabetic patients at rest and during exercise. Clin Sci (Lond). 2002 Dec;103(6):559-66.

Goyens P. L. L., Spilker M. E., Zock P. L., Katan M. B., and Mensink R. P. Compartmental modeling to quantify α-linolenic acid conversion after longer term intake of multiple tracer boluses. J Lipid Res. 2005 Jul;46(7):1474-83.

Goyens P. L. L. and Mensink R. P. The dietary α-linolenic acid to linoleic acid ratio does not affect the serum lipoprotein profile in humans. J Nutr. 2005 Dec; 135(12):2799-804.

Goyens P. L. L. and Mensink R. P. Effects of α-linolenic acid versus those of EPA/DHA on cardiovascular risk markers in healthy elderly subjects. Eur J Clin Nutr. 2006 Aug;60(8):978-84.

Goyens P. L. L., Spilker M. E., Zock P. L., Katan M. B., and Mensink R. P. Conversion of α-linolenic acid in humans is influenced by the absolute amounts of α-linolenic acid and linoleic acid in the diet and not by their ratio. Am J Clin Nutr. 2006 Jul;84(1):44-53.

Goyens P. L. L., Spilker M. E., Zock P.L., Katan M. B., and Mensink R.P. Determinants of α-linolenic acid conversion. Submitted.

POSTERS AND ABSTRACTS

Goyens P. L. L. and Mensink R. P. Oxidation of [U-^{13}C]-α-linolenic acid is not changed by the amounts or ratio of α-linolenic and linoleic acid in the diet. Presented as poster at the ISSFAL 6th Congress. Brighton, June 27 - July 1, 2004.

Goyens P. L. L., Spilker M. E., Zock P. L., Katan M. B., and Mensink R. P. Determinants of the conversion of dietary α-linolenic acid into EPA and DHA in humans. XV International Symposium on Drugs Affecting Lipid Metabolism. Venice, October 24 - 27, 2004.

Goyens P. L. L., Spilker M. E., Zock P. L., Katan M. B., and Mensink R. P. Not the α-linolenic to linoleic acid ratio, but the amounts of dietary α-linolenic acid and linoleic acid determine *in vivo* conversion of α-linolenic acid. XV International Symposium on Drugs Affecting Lipid Metabolism. Venice, October 24 - 27, 2004.

Mensink R. P. and Goyens P. L. L. Compartmental modeling to quantify α-linolenic acid conversion into EPA and DHA in humans. Aktuel Ernaehr Med 2006; 31: 211-217.

Mensink R. P. and Goyens P. L. L. Conversion of α-linolenic acid into EPA and DHA in humans. Euro Fed Lipid congress - "Fats, Oils and Lipids for a Healthier Future". Madrid, October 1 - 4, 2006.